DTIC FILE COPY

(2)

WRDC-TR-90-3029

AD-A222 503

DEVELOPMENT OF A PROTOTYPE SYSTEM FOR THE IMPULSE CALIBRATION OF MICROPHONES

David L. Mullendore
Dayton Scientific Inc.
92 Westpark Court
Dayton, OH 45459

April 1990

Final Report for Period Sep 87 to Sep 89

DTIC
ELECTE
MAY 30 1990
S B D

Approved for public release; distribution unlimited

FLIGHT DYNAMICS LABORATORY
WRIGHT RESEARCH DEVELOPMENT CENTER
AIR FORCE SYSTEMS COMMAND
WRIGHT-PATTERSON AIR FORCE BASE, OHIO 45433-6553

90 05 29 054

NOTICE

When Government drawings, specifications, or other data are used for any purpose other than in connection with a definitely Government-related procurement, the United States Government incurs no responsibility or any obligation whatsoever. The fact that the government may have formulated or in any way supplied the said drawings, specifications, or other data, is not to be regarded by implication, or otherwise in any manner construed, as licensing the holder, or any other person or corporation; or as conveying any rights or permission to manufacture, use, or sell any patented invention that may in any way be related thereto.

This report is releasable to the National Technical Information Service (NTIS). At NTIS, it will be available to the general public, including foreign nations.

This technical report has been reviewed and is approved for publication.

David Banaszak
DAVID BANASZAK
Project Engineer

Richard D Talmadge
RICHARD D. TALMADGE
Project Engineer

FOR THE COMMANDER

John T. Ach
JOHN T. ACH, Acting Chief
Structural Dynamics Branch

If your address has changed, if you wish to be removed from our mailing list, or if the addressee is no longer employed by your organization please notify WRDC/FIBG, WPAFB, OH 45433-6553 to help us maintain a current mailing list.

Copies of this report should not be returned unless return is required by security considerations, contractual obligations, or notice on a specific document.

Unclassified

SECURITY CLASSIFICATION OF THIS PAGE

REPORT DOCUMENTATION PAGE

Form Approved OMB No. 0704-0188

1a REPORT SECURITY CLASSIFICATION: Unclassified	1b RESTRICTIVE MARKINGS
2a SECURITY CLASSIFICATION AUTHORITY	3 DISTRIBUTION/AVAILABILITY OF REPORT: Approved for public release; distribution unlimited.
2b DECLASSIFICATION/DOWNGRADING SCHEDULE	
4 PERFORMING ORGANIZATION REPORT NUMBER(S)	5 MONITORING ORGANIZATION REPORT NUMBER(S): WRDC-TR-90-3029
6a NAME OF PERFORMING ORGANIZATION: Dayton Scientific Inc. / 6b OFFICE SYMBOL (If applicable)	7a NAME OF MONITORING ORGANIZATION: Flight Dynamics Laboratory (WRDC/FIBG) Wright Research Development Center
6c ADDRESS (City, State, and ZIP Code): 92 Westpark Court Dayton, OH 45459	7b ADDRESS (City, State, and ZIP Code): Wright-Patterson AFB, OH 45433-6553
8a NAME OF FUNDING/SPONSORING ORGANIZATION / 8b OFFICE SYMBOL (If applicable)	9 PROCUREMENT INSTRUMENT IDENTIFICATION NUMBER: F33615-87-C-3220
8c ADDRESS (City, State, and ZIP Code)	10 SOURCE OF FUNDING NUMBERS

PROGRAM ELEMENT NO	PROJECT NO.	TASK NO	WORK UNIT ACCESSION NO
62201F	2401	04	33

11 TITLE (Include Security Classification): Development of a Prototype System for the Impulse Calibration of Microphones

12 PERSONAL AUTHOR(S): David L. Mullendore, Dayton Scientific Inc.

13a TYPE OF REPORT	13b TIME COVERED	14 DATE OF REPORT (Year, Month, Day)	15 PAGE COUNT
Final	FROM Sep 87 TO Sep 89	1990 April	87

16 SUPPLEMENTARY NOTATION

17 COSATI CODES			18 SUBJECT TERMS (Continue on reverse if necessary and identify by block number)
FIELD	GROUP	SUB-GROUP	

19 ABSTRACT (Continue on reverse if necessary and identify by block number)

Current techniques of microphone calibration are not readily adapted for use in the field and do not produce data on both frequency and phase characteristics. A new technique was investigated for calibrating microphones using a pressure impulse, which will produce calibration of both amplitude and phase and will be adaptable to field use.

20 DISTRIBUTION/AVAILABILITY OF ABSTRACT	21 ABSTRACT SECURITY CLASSIFICATION
☒ UNCLASSIFIED/UNLIMITED ☐ SAME AS RPT ☐ DTIC USERS	Unclassified

22a NAME OF RESPONSIBLE INDIVIDUAL	22b TELEPHONE (Include Area Code)	22c OFFICE SYMBOL
David Banaszak	(513) 255-2543	WRDC/FIBG

DD Form 1473, JUN 86 — Previous editions are obsolete

TABLE OF CONTENTS

SECTION		PAGE
1.0	ABSTRACT	1
2.0	INTRODUCTION	1
3.0	STATEMENT OF THE PROBLEM	1
4.0	DEVELOPMENT PROGRAM	2
	4.1 Design Evolution of the Prototype Impulse Calibration Hardware	2
	4.2 Instrumentation	7
	4.3 Mathematical Analysis and Verification	9
	4.3.1 Transfer Function Analysis	9
	4.3.2 Noise Considerations	14
	4.3.3 Sampling Considerations	14
	4.3.4 Peak Pressure Analysis	17
	4.4 General Test Procedure	18
5.0	TEST RESULTS	20
	5.1 Analysis of Datasets 06200957	20
	5.2 Analysis of Datasets 09130923	26
	5.3 Analysis of Datasets 09141425	31
	5.4 Analysis of Datasets 09141422...09141426	38
	5.5 Microphone Calibration Test Data	43
	5.5.1 Analysis of Dataset 05020951	43
	5.5.2 Analysis of Dataset 05021004	49
	5.5.3 Analysis of Datasets 050457	51
6.0	CONCLUSIONS	54
	REFERENCES	56
APPENDIX A:	PROTOTYPE IMPULSE CALIBRATION UNIT DRAWINGS	A-1

DTIC COPY INSPECTED 4

Accession For
NTIS GRA&I ☑
DTIC TAB ☐
Unannounced ☐
Justification
By
Distribution/
Availability Codes
Dist | Avail and/or Special
A-1

DEVELOPMENT OF A PROTOTYPE SYSTEM FOR THE IMPULSE CALIBRATION OF MICROPHONES

David L. Mullendore
Vice President
Dayton Scientific Inc.
Dayton, Ohio

1.0 ABSTRACT

Current techniques of microphone calibration are not readily adapted for use in the field and do not produce data on both frequency and phase characteristics. A new technique was investigated for calibrating microphones using a pressure impulse, which will produce calibration of both amplitude and phase and will be adaptable to field use.

2.0 INTRODUCTION

This Final Report describes the effort performed by Dayton Scientific Inc. for the Structural Dynamics Branch of the Flight Dynamics Laboratory, Wright-Patterson Air Force Base, under Air Force Contract F33615-87-C-3220. The Structural Dynamics Branch maintains a facility that provides wide-band dynamic data acquisition and analysis capability to support Structural Dynamics Research and Development. These endeavors require an accurate, portable, and simple procedure for calibrating microphones and pressure transducers, especially while in use at remote test sites during field operations.

3.0 STATEMENT OF THE PROBLEM

The techniques generally used to obtain the amplitude and phase versus frequency characteristics of microphones and low pressure transducers involve considerable time and require expensive equipment. Conventional calibration methods involve performing a series of sine sweeps at various amplitudes over the frequency range of interest, a procedure that is generally restricted to a laboratory environment. Calibration of microphones at a test site is currently performed with a pistonphone at a single point/single level, which results in a check of transducer output but provides no information concerning the transducers frequency or phase response.

It was the purpose of this contractual effort to develop and validate a technique of microphone calibration which would use a single pressure impulse as the input to a microphone being calibrated. The response of the microphone to the pressure impulse would then be recorded and Fourier Transform techniques used to determine the frequency and phase characteristics of the microphone. If successful, this technique could be implemented with relatively inexpensive hardware, it would be simple to adapt to field use, and the calibration could be performed quickly.

The primary quantitative performance goals of this contract were to demonstrate a prototype Impulse Calibration Unit meeting the following specifications:

Bandwidth: 10 Hertz to 5000 Hertz
Accuracy: +/-0.5 dB
Amplitude Range: to 170 dB Sound Pressure Level (SPL)
Repeatability of Calibration: < +/- 0.5 dB SPL

4.0 DEVELOPMENT PROGRAM

4.1 Design Evolution of the Prototype Impulse Calibration Hardware

The initial work on which this contract is based was conducted by the Structural Dynamics Branch of the Flight Dynamics Laboratory, WPAFB, Ohio. The general approach was to create a pressure impulse within a closed cylinder, into one end of which is placed the microphone to be calibrated. The microphone output, in response to the impulse input, is then analyzed using transform techniques to obtain the frequency and phase response of the microphone.

In the early stages of this contract, test data were acquired from the fixture using the force impulse (measured with a force transducer integral with the modal hammer) as the input function and the microphone pressure pulse (as measured with a standard microphone) as the output function. Then a transfer function was calculated based on the microphone output vs. the force input. It was found that the resulting transfer function was not constant but rather varied as a function of impulse amplitude, indicating a non-linear system response. Therefore, a reference microphone having known frequency characteristics was also placed in the cylinder. The reference microphone sees the same pressure impulse as the test microphone, and the reference microphone output may then be used to correct for the variations in the system transfer function.

In the Prototype Impulse Calibration unit, the pressure impulse is created by striking a piston which occupies one end of a closed cylindrical cavity having a very small volume. The opposite end of the cylindrical cavity is closed

by a flat plate on which is flush-mounted the microphones. When the piston is struck it moves slightly within the cavity, causing the cavity volume to decrease and the cavity pressure to increase rapidly.

It is important that the pressure pulse have sufficient high frequency energy content to permit Fourier Transform analysis to be reliable over the required frequency spectrum, which includes the range from 10 Hz. to 5 kilohertz. The pressure pulse will be of short duration if the mass of the piston is relatively small, if the cavity volume is small, and if the friction between the piston and the cylinder is negligible. In additional, the leakage around the piston must be minimized to create a rapid pressure rise in the cavity.

Overall views of the prototype Impulse Calibration Unit are shown in Figures 1 and 2. Detailed drawings of the final design of the prototype Impulse Calibration Unit are included in Appendix A. The design consists of a small cylindrical metal cavity into one end of which is suspended a closely-fitting piston. The opposite end of the cylinder is closed by a plate onto which the microphones are flush mounted so that their diaphragms experience the pressure in the cavity. Attached to the center of the piston on the side opposite the cavity (the top side in the photographs, Figures 1 and 2) is a hardened steel button. An impact is imparted to the piston by striking the button with a small modal hammer, or by dropping a small steel ball onto the button from a height of a few inches. The change in cavity volume that occurs when the piston slightly moves under impact causes a rapid rise in cavity pressure. This rapid rise in cavity pressure is the pressure impulse seen simultaneously by both microphones.

A vacuum chuck whose height is adjustable from about 1-inch up to about 15-inches is located above the piston. The vacuum chuck may be used to hold and then drop a steel ball onto the impact button. The vacuum chuck can be seen in Figure 1 attached to the vertical rail above the cylinder assembly.

The Impulse Calibration Unit was designed to have the smallest possible cylinder diameter, to have a very small piston mass, and to have a very small cavity volume. The resulting cylinder/piston assembly is shown in the photograph, Figure 3, and in Drawing 103263 and 103264. In the photograph the cylinder is shown on the left; the piston is in the center; and a disk spring, which suspends the piston in the cylinder, is shown on the right. The piston diameter is 1.3-inches, which was felt to be the minimum practical diameter consistent with the requirement to be able to mount both a reference microphone and a test microphone within the diameter of the cavity. The piston mass was further minimized by machining it out of magnesium alloy using EDM (electrical discharge machining) techniques to

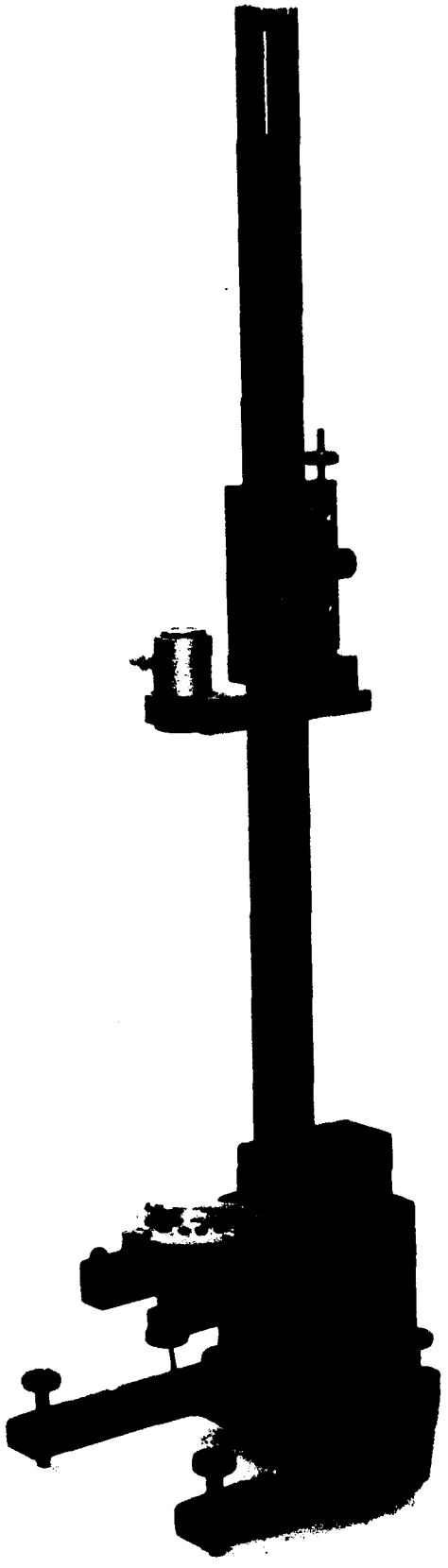

FIGURE 1
OVERALL VIEW OF THE PROTOTYPE
IMPULSE CALIBRATION UNIT

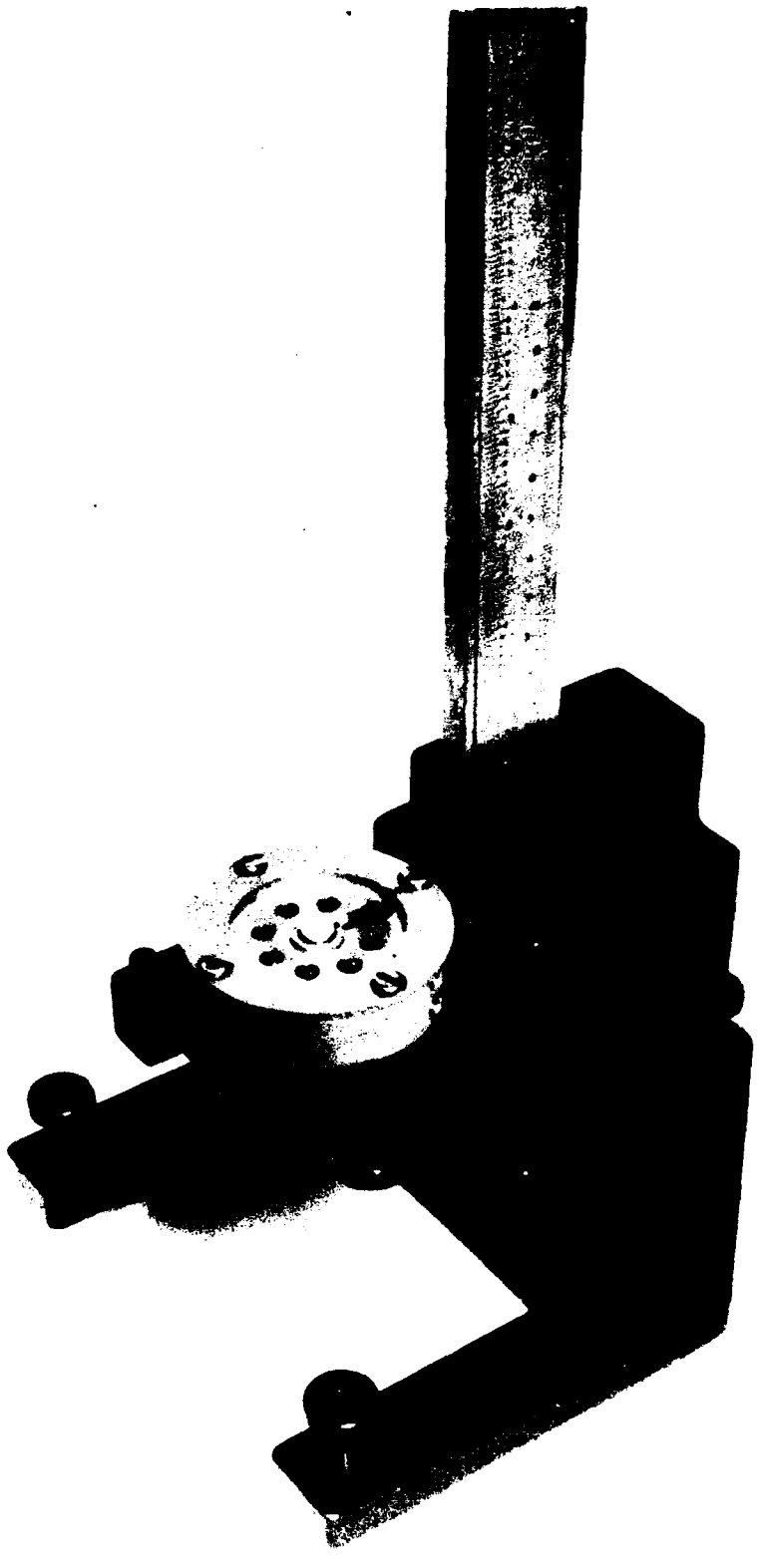

FIGURE 2
CLOSE-UP OF THE IMPULSE CALIBRATION
UNIT CYLINDER ASSEMBLY

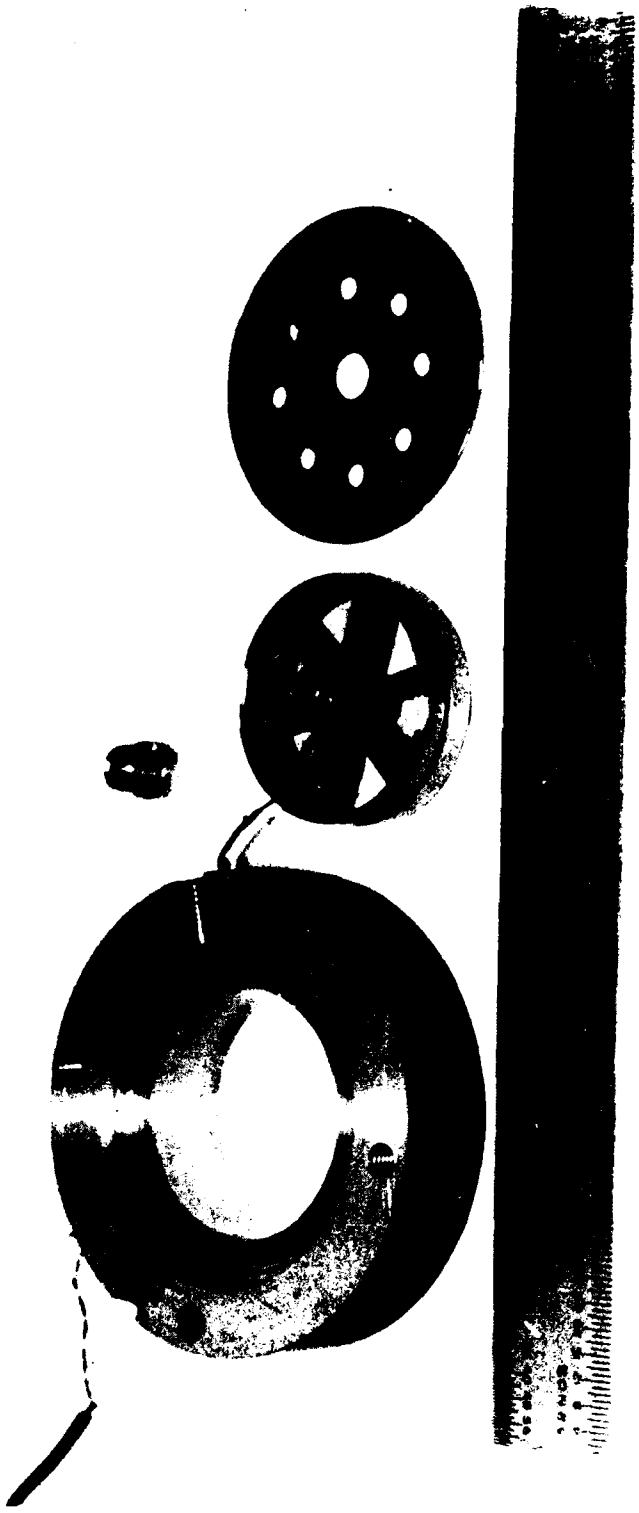

FIGURE 3
VIEW OF THE CYLINDER AND PISTON DISASSEMBLED

carefully remove the material between the webs of the piston, without distorting the piston. The resulting piston shown in the photograph has a weight of approximately 5 grams or 0.011 lbs.

To minimize the friction between the cylinder walls and the piston and to minimize leakage past the piston, the piston O.D. and the cylinder bore were machined to very close tolerances. The air gap between the piston O.D. and the cylinder bore is nominally 0.0005-inches, and in no case greater than 0.0008-inches. Early in the project the piston was kept centered in the cylinder by an air bearing. Later it was discovered that a thin film of synthetic lubricant (Convalube-C) performed the same function; plus the lubricant had the side benefit of slightly damping the piston, which reduced high frequency vibrations.

The Prototype Impulse Calibration Unit will generate a pressure pulse in excess of 170 dB SPL when the piston is struck with a peak impact force of only a few pounds. Using a small modal hammer (PCB 086C80) or a 1/4" steel ball as the impact source, the duration of the pressure pulse is approximately 150 microseconds. Although the repeatability of the pressure pulse for a given impact force is quite good, the transfer function of the cylinder/piston assembly was found to vary as a function of impact force. It was for this reason that the reference microphone is included as a standard against which the unknown microphone is calibrated.

4.2 Instrumentation

Figure 4 is a general Block Diagram of the instrumentation configuration used during the development program. The prototype system was instrumented with a force transducer, which was an integral part of the modal hammer; and an accelerometer, which was mounted within and along the axis of the piston. Both the force transducer and the accelerometer were quartz piezoelectric types with an integral unity-gain amplifier. A PCB Model 086C80 Modal Hammer with built-in ICP force sensor provided the force signal, while the accelerometer was a PCB Type 309A. The 309A accelerometer was small enough to mount within the piston, and added only one gram to the piston weight. The signal from each transducer was conditioned by a PCB Type 480D06 Power Unit, which provided bias current to the transducer and a low impedance output for monitoring.

When the modal hammer was used as the impact source for impact testing, the force transducer signal was sometimes recorded along with the microphone output data. The recorded force data were then used to determine the spectral content of the impulse, or as the input for analysis of the piston transfer function. Generally when the force data were being

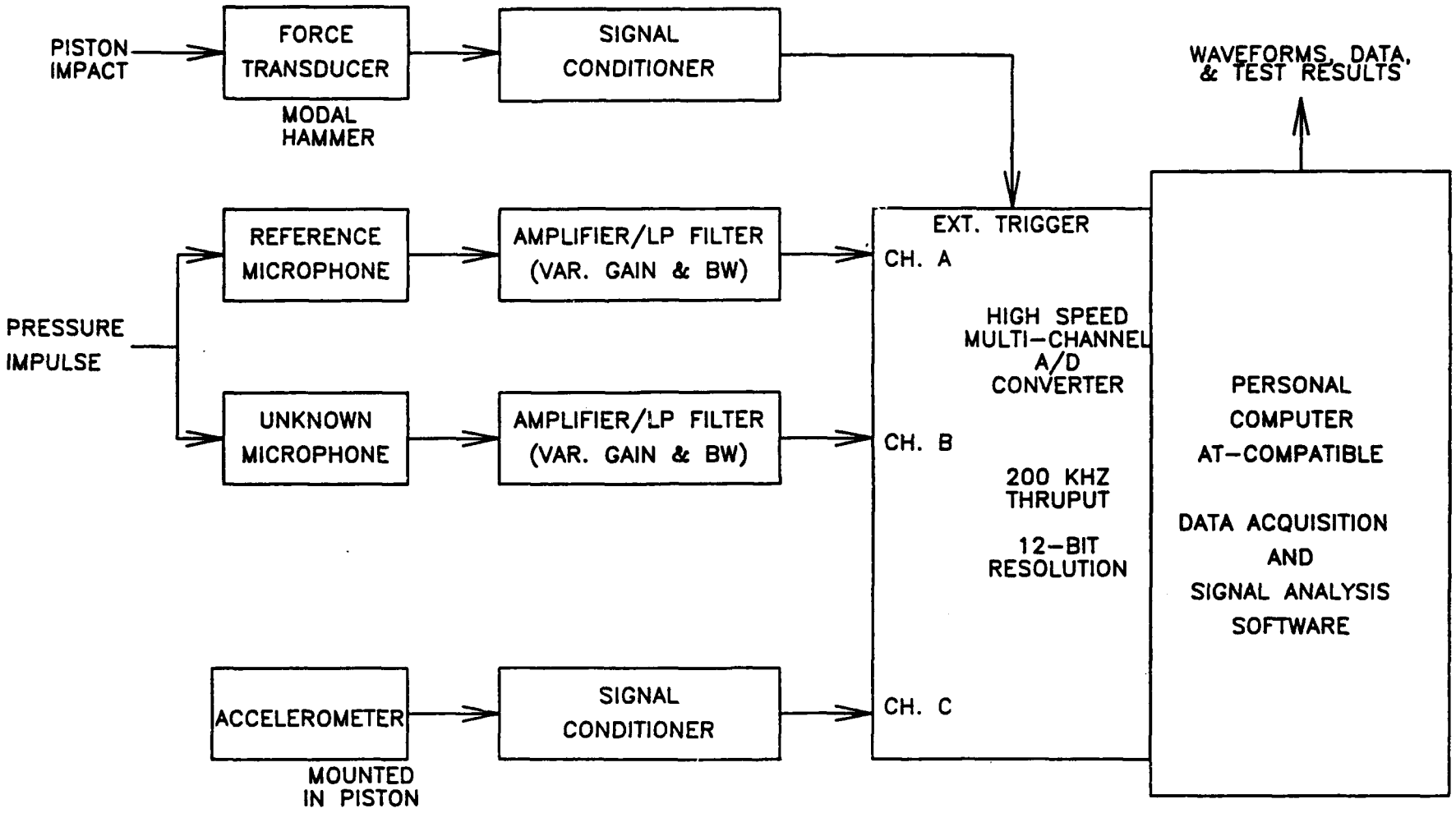

FIGURE 4
BLOCK DIAGRAM OF IMPULSE
CALIBRATION SYSTEM INSTRUMENTATION

recorded, the force signal output was input to the A/D Converter in place of one of the microphones. Also, the force signal was used as the external trigger to initiate the acquisition of microphone signal data during an impact with the modal hammer, as shown in Figure 4.

The accelerometer signal was monitored during some test impacts to provide data for analysis of piston motion.

The two microphone channels included identical instrumentation amplifiers having selectable gain and bandwidth. The gain of each amplifier was generally set to a value which resulted in a peak signal level of 1 to 10 volts at the input to the A/D converter. This permitted maximum utilization of the 12-bit dynamic range of the A/D converter while using a +/-10 volt full scale range. The amplifier bandwidth was set to 10 kHz for most of the testing.

The amplified microphone signals were normally applied to two input channels of the Analog Devices RTI-860 Analog-to-Digital Converter. The RTI-860 provides a conversion thruput in excess of 200,000 per second, allowing each microphone signal to be sampled and digitized at a rate of 100,000 samples per second. The sample interval was set to 0.001 seconds, which resulted in 100 data samples per channel. The resolution of the A/D converter was 12-bits or one part in 4096. After the microphone data was acquired for each test impact, the data was written to a computer disk file to be retained for further analysis. The data acquisition process was controlled from within the SNAPSHOT software package. The SNAPSHOT software was used to set up and control the data acquisition process for all of the prototype Impulse Calibration Unit testing.

4.3 Mathematical Analysis and Verification

4.3.1 Transfer Function Analysis

Figure 5 is a frequency domain diagram of the Impulse Calibration Unit corresponding to the Block Diagram of Figure 4. This frequency domain diagram will be used in the following analysis. A pressure impulse is generated by the impact of the hammer or the falling ball on the piston. The pressure impulse I(w) is simultaneously applied to both the reference("ref.") microphone and the microphone to be calibrated("unknown" microphone). The reference channel of the system includes the reference microphone having a response function $H_R(w)$ and an amplifier/low pass filter having a response function $K_R(w)$. The unknown channel of the system includes the unknown microphone having the response function $H_U(w)$ to be determined, and an amplifier/low pass filter having a response function $K_U(w)$. Now, if the transforms of the output functions from the reference and the

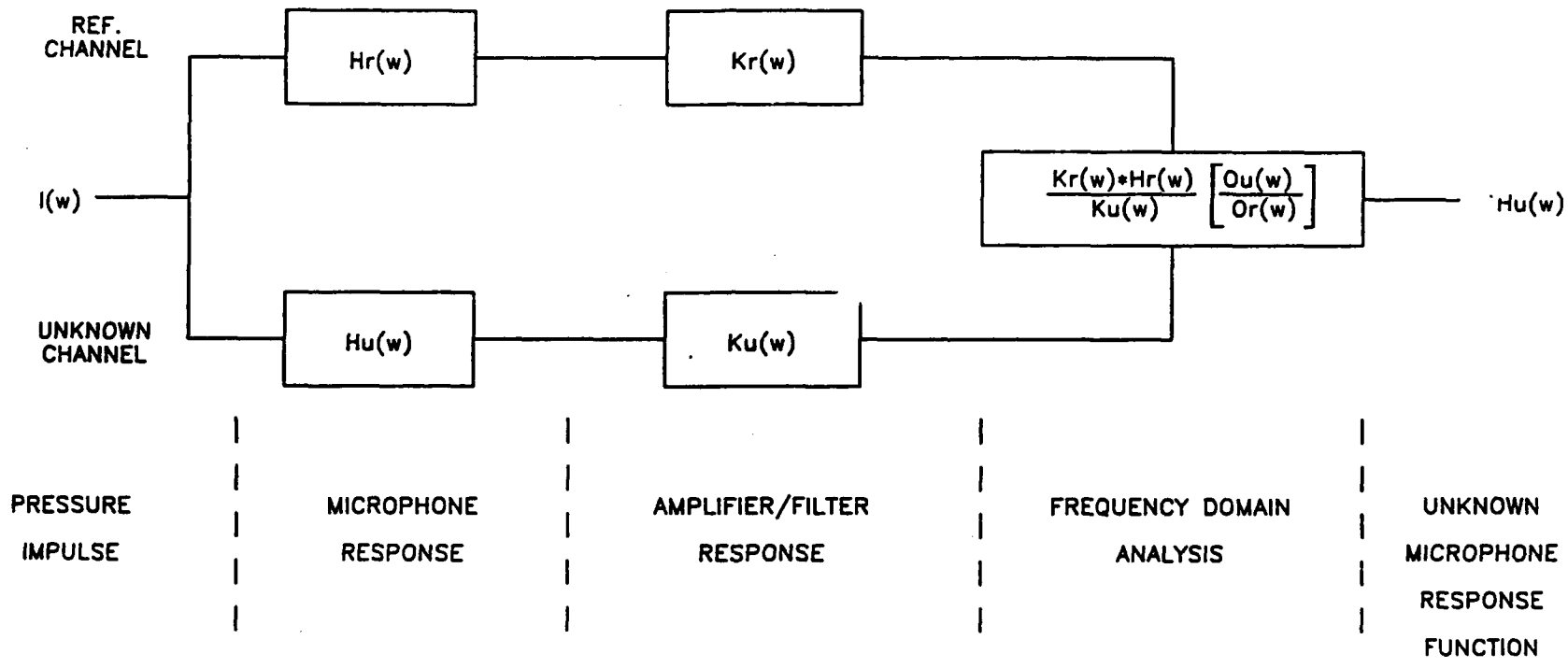

FIGURE 5
FREQUENCY DOMAIN DIAGRAM

unknown channels respectively are $O_R(w)$ and $O_U(w)$, the expressions for the output of each channel are:

$$O_R(w)=I(w)*H_R(w)*K_R(w) \qquad (1)$$

$$O_U(w)=I(w)*H_U(w)*K_U(w) \qquad (2)$$

These expressions can be solved for the unknown microphone response, which results in expression (3).

$$H_U(w)=\frac{K_R(W)*H_R(w)}{K_U(w)} * \frac{O_U(w)}{O_R(w)} \qquad (3)$$

The first term in this expression consists of fixed quantities which are either known or can be accurately measured. The second term consists of the output of the unknown and reference microphones in response to the pressure impulse. Therefore, if the frequency response of the amplifiers and the reference microphone are known, one can calculate the transforms of the output signals from the two microphones. Then the response of the unknown microphone can be calculated using Equation 3. Note that all quantities are complex; that is, they involve both amplitude and phase.

The analysis described above could be performed by a commercially available two channel signal analyzer. However, since one of the objectives of this program was to develop an inexpensive instrument for field use, the approach taken was to use a personal computer to acquire, digitize, and store the microphone signals; and then to operate upon the recorded signal data with Fast Fourier Transform techniques utilizing a commercially available signal analysis software package. For the purposes of this investigation, the FFT operations were implemented with the commercially available DADiSP signal analysis software package. However, a practical field instrument would require software written especially for the application.

The successful application of the impulse calibration technique requires that the frequency response of the reference microphone be accurately known, be relatively flat, and be repeatable throughout the frequency range of interest. Also, the pressure impulse input to the microphones must have a relatively high energy content throughout the frequency range of interest. Note however that the impulse transform does not appear in expression (3), which means that the impulse does not have to be perfect nor does it have to be exactly repeatable from test to test.

A typical pressure impulse generated by the prototype calibration unit in its final form is shown in Figure 6. The frequency spectrum of this impulse is shown in Figure 7. It will be noted that the spectrum of the pressure pulse falls off rapidly below 500 Hz. and above 4 kHz.

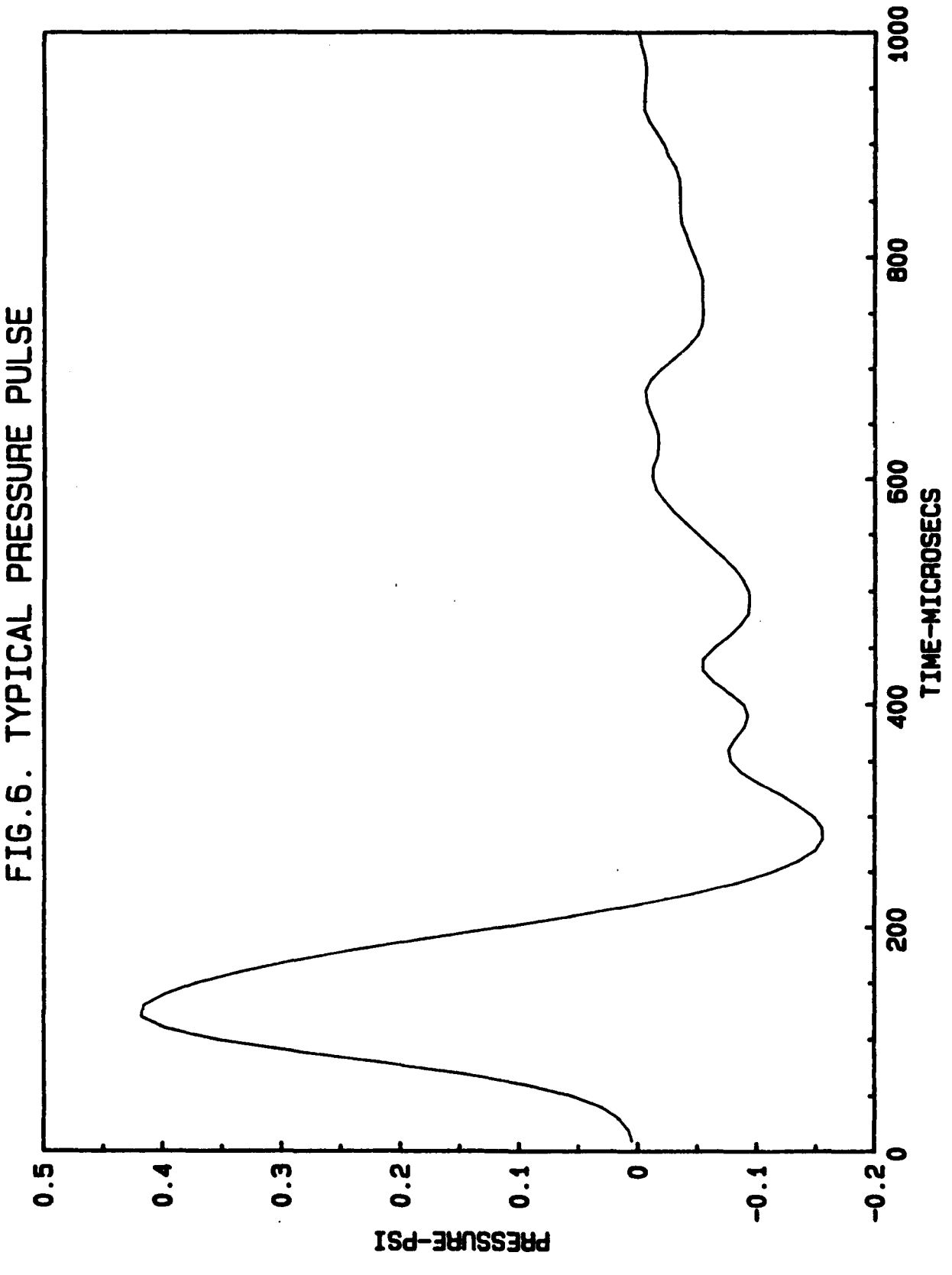
FIG.6. TYPICAL PRESSURE PULSE
PRESSURE-PSI
0.5
0.4
0.3
0.2
0.1
0
-0.1
-0.2
0
200
400
600
800
1000
TIME-MICROSECS

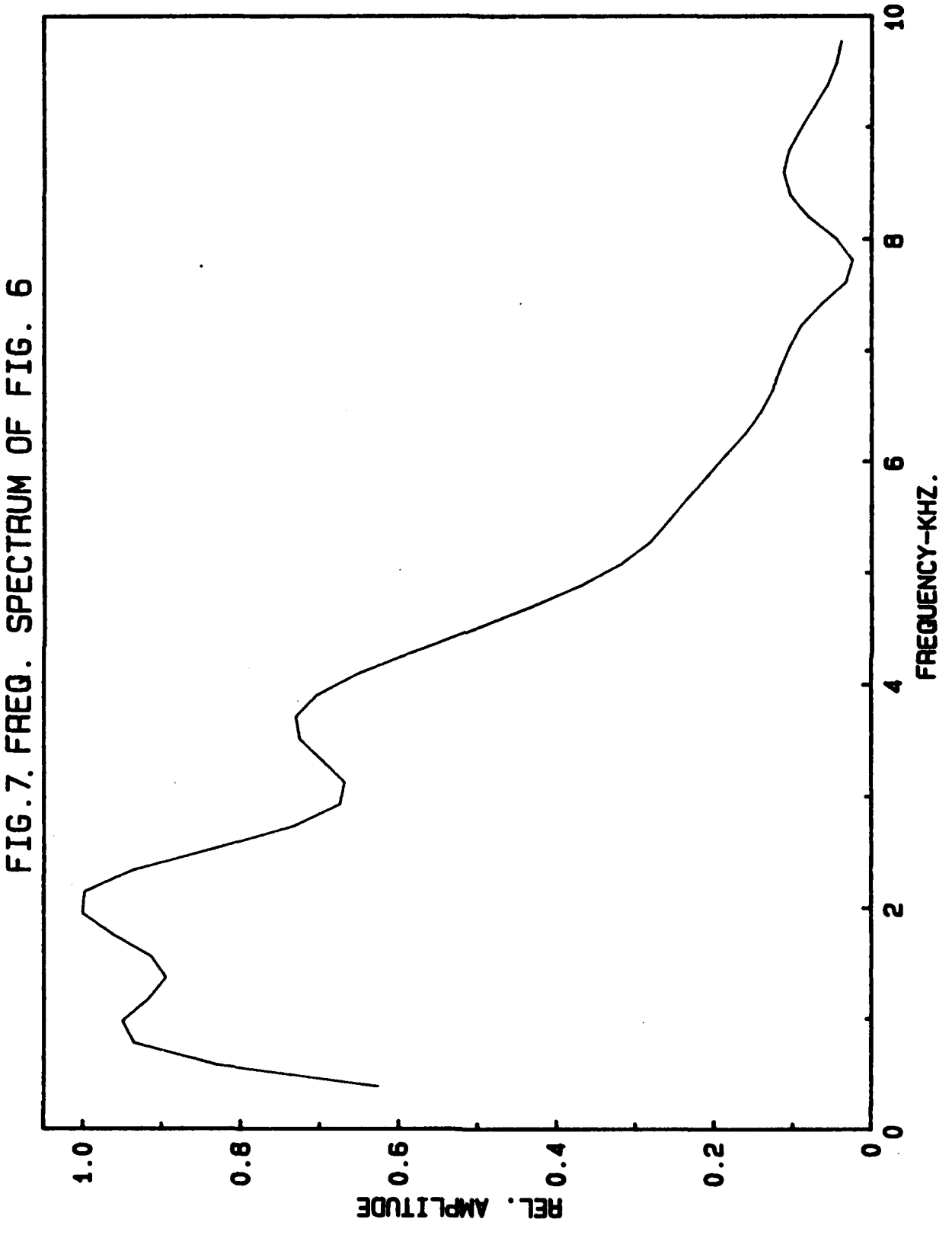

FIG. 7. FREQ. SPECTRUM OF FIG. 6

4.3.2 Noise Considerations

The effects of random noise contained in the microphone output signals can sometimes be reduced by applying a window function to the time domain signal before taking the frequency transform; and/or by averaging the response functions resulting from multiple impacts. A number of different window functions have been suggested in the literature. However, for single event impulse-type analysis, a window such as the unity-plus-cosine taper shown in Figure 8 or the exponential taper shown in Figure 9 are recommended. Some of the calibration test results reported in Section 5.5 were obtained using the unity-plus-cosine window (with the cosine taper beginning 600 microseconds into the measurement interval). This window has been found to be preferable to other window functions in this application.

4.3.3 Sampling Considerations

The microphone output signals are conditioned and/or amplified when necessary, low-pass filtered, and converted to digital form for computer processing by using a clocked analog to digital converter (ADC). The signal conditioner and/or amplifier generally provides transducer biasing, if required, and amplification of the microphone signal. The A/D conversion is a sampling process which introduces the need to define and control several additional variables; i.e. signal bandwidth, sampling rate, and sample interval.

The signal data from each microphone was bandlimited to prevent "aliasing" during the A/D conversion process. Aliasing results in the folding of higher frequency energy into the frequency band of interest. Aliasing is prevented by limiting the signal bandwidth before the A/D conversion process to less than half the signal sampling frequency.

The microphone signal bandwidth of interest for calibration purposes is 5000 Hz. Based on the Nyquist criteria a sampling rate of at least 10,000 samples per second is required. However to insure computational accuracy all of the investigations associated with this project have utilized sampling rates of 50,000 to 100,000 samples per second on each data channel. The impulse signal from the microphones generally has a duration of 150 to 200 microseconds. A sample interval of 1.0 millisecond was used for acquiring the signal data. With a sampling rate of 100,000 samples per second and a sample interval of 1.0 millisecond, 101 samples of data were acquired from the reference channel and from the unknown microphone channel during each impact event.

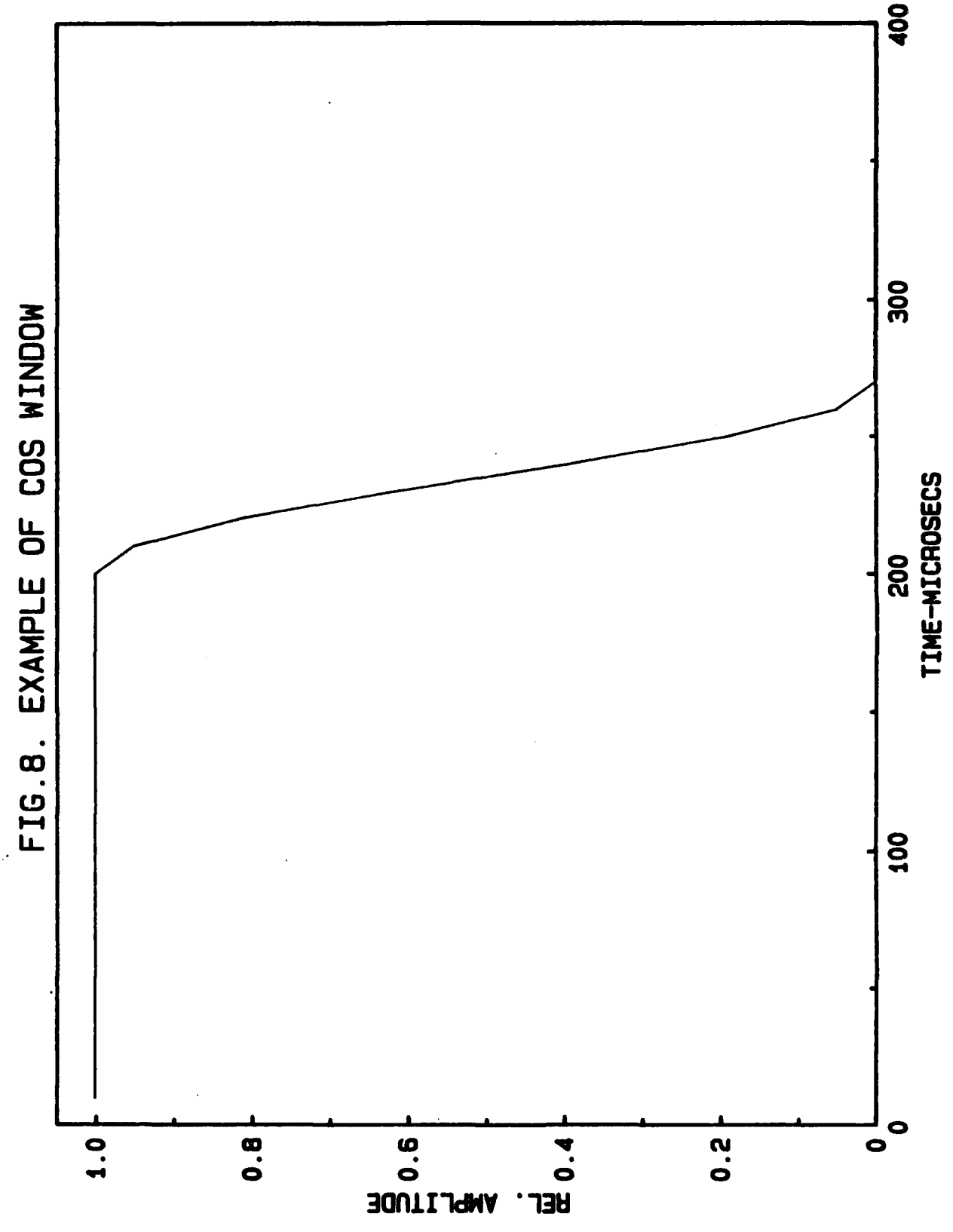
FIG.8. EXAMPLE OF COS WINDOW
REL. AMPLITUDE
1.0
0.8
0.6
0.4
0.2
0
0
100
200
300
400
TIME-MICROSECS

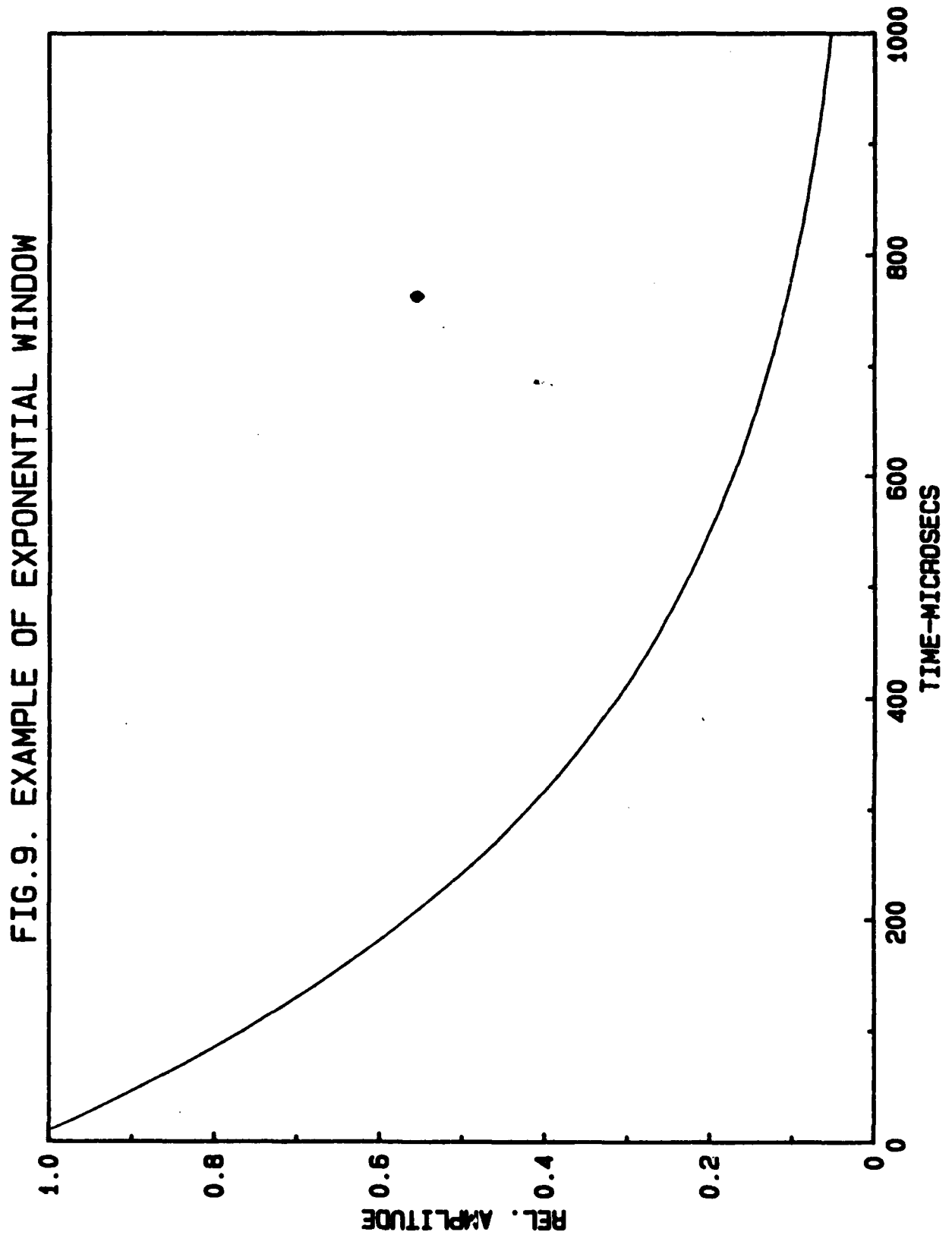
FIG.9. EXAMPLE OF EXPONENTIAL WINDOW
REL. AMPLITUDE
1.0
0.8
0.6
0.4
0.2
0
0
200
400
600
800
1000
TIME-MICROSECS

The frequency resolution of the FFT calculation is equal to the inverse of the record length (sample interval). It is also desirable for the record to contain a number of samples which is a power of two. Therefore zeros were added to the data records to make 256 or 512 data points, or the equivalent of a 2.56 or 5.12 millisecond record, resulting in a frequency resolution of 390 Hz or 195 Hz respectively.

4.3.4 Peak Pressure Analysis

The pressure rise within the cylinder cavity resulting from an impact can be calculated by considering the change in volume which occurs when the piston is struck. The change in cavity volume is directly related to the displacement of the piston, as shown by expression (4).

$$V_f = V_i - \left[\frac{S}{0.0085}\right] * V_i \qquad (4)$$

where V_f is the final cavity volume,
V_i is the initial cavity volume (which is fixed),
S is the piston displacement after impact, and the constant 0.0085 is the initial cavity gap in inches.

If it is assumed that the temperature of the air in the cavity does not change during an impact, then the pressure change in the cavity resulting from a piston displacement S will be:

$$P = P_i * \left[\frac{S}{0.0085}\right] \qquad (5)$$

where P_i is the initial pressure in the cavity (ambient pressure).

During the program, it was desired to verify that the pressure in the cavity behaved in accordance with Equation (5). Since it was impractical to measure the piston displacement directly, the displacement was calculated by performing a double integration of the accelerometer signal. The resulting piston displacement value was then used in Equation (5) to calculate a peak cavity pressure, which was directly compared to the cavity pressure measured by the reference microphone. It was found that the two values tracked in a predictable manner, with the measured peak pressure generally 20% lower than the calculated peak pressure. This difference is most likely due to inaccuracy in the method used to calculate the piston displacement, since a small error or bias in the acceleration signal causes a significant error in the calculated displacement.

4.4 General Test Procedure

In the general case, both a reference and an unknown microphone were included in the prototype Impulse Calibration Unit. The procedure used to acquire and analyze test data from the Prototype Impulse Calibration System is indicated by the Flow Chart, Figure 10. The acquisition, display, and storage of microphone signal data resulting from a test impact to the piston was controlled by the SNAPSHOT[1] software package running on an PC/AT-compatible personal computer. The acquired data was then imported into the DADiSP[2] software environment for analysis. The DADiSP software provides the capability of applying mathematical functions to the microphone signals for all of the required operations including windowing, scaling, FFT, and complex operations. In general, the operations listed in the Flow Chart, Figure 10 were performed on each dataset. The test results consist of frequency and phase data, which is available either as a table of complex values or as hard copy plots. During the development program, certain of the analysis parameters were varied to arrive at the optimum choice; for example, the best choice of window function.

The general test procedure used during the development program utilized standard software packages because of their flexibility and low cost. To save time and reduce the amount of user interaction required during development, command files were written to automate the repetitive analysis functions. The same functionality could be programed into an appropriately equipped, portable PC for field use; wherein the test procedure would be programed specifically for the impulse calibration system and would execute automatically.

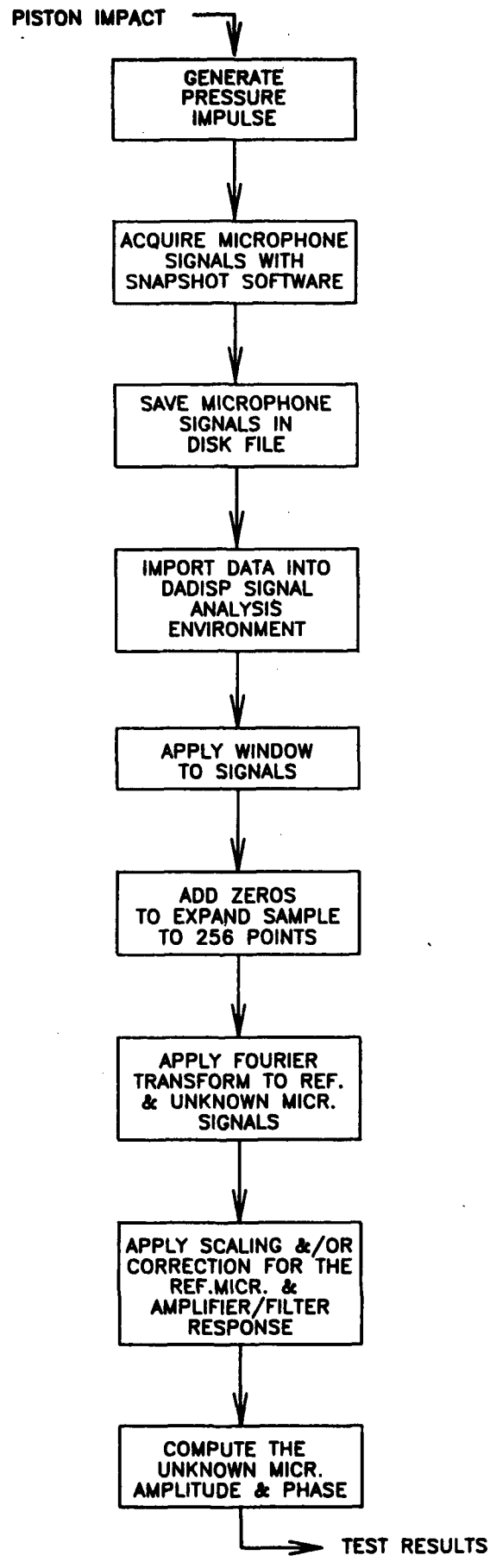

FIGURE 10

FLOW CHART OF GENERAL TEST PROCEDURE

5.0 Test Results

A considerable quantity of empirical test data was acquired from the Prototype Impulse Calibration Unit during the course of this contract. Generally, the test data was acquired using the instrumentation and procedures described in the preceding sections. The test data was then analyzed to determine if the unit was meeting certain design goals, and if not, then changes were implemented and the unit retested. This process was repeated many times during the program as the design of the unit evolved to its current state.

The data presented in this section consists of representative test results in the form of data plots from various stages of the program, along with an analysis of the results. The test conditions under which the data was acquired are listed with each group of data. Each grouping of test data plots is identified by an eight-digit dataset number, which also appears in the title of the section where the test results are discussed. The sequence of the data presented corresponds to the chronology of the effort on the project.

5.1 Analysis of Datasets 06200957

TEST CONDITIONS

Impact Source: Modal Hammer with steel tip
Data Acquired: Force and Pressure
Transducers: Force sensor in Modal Hammer
Pressure sensor was standard microphone (PCB Model 112A22)
Signal Conditioning:
Force Sensor-PCB 480D06 @ X1 Gain (1.11 lbs/volt)
Pressure Sensor-PCB 480D06 @ X10 Gain (0.87 PSI/volt)
Bandwidth(both channels): 25 kHz.
Data Sampling Rate: 100,000 samples/sec/channel
Sampling Interval: 0.001 Secs.

ANALYSIS NOTES

$$\text{Transfer Function} = \text{Magnitude} * \frac{\text{FFT(Pressure Signal)}}{\text{FFT(Force Signal)}}$$

Before computing the Transfer Function, zeros were added to the signal samples for each channel to give 512 samples, which results in a frequency resolution of 195 Hz.

DISCUSSION

The plots for Dataset 06200957 were generated from data taken with the original piston design, in which a full size piston

is suspended by air jets. The cavity volume, however, was reduced to 80% of the original volume by the insertion of a spacer into the piston cavity to make the cavity volume smaller.

The relatively broad pressure pulse resulted in a pressure spectrum having little energy above 3 kHz. Therefore, one of the primary efforts in the early stages of the project was to improve upon the high frequency energy content of the pressure pulse.

PLOTS FOR DATASET 06200957

1. IMPACT FORCE
2. PRESSURE PULSE
3. PRESSURE SPECTRUM
4. TRANSFER FUNCTION

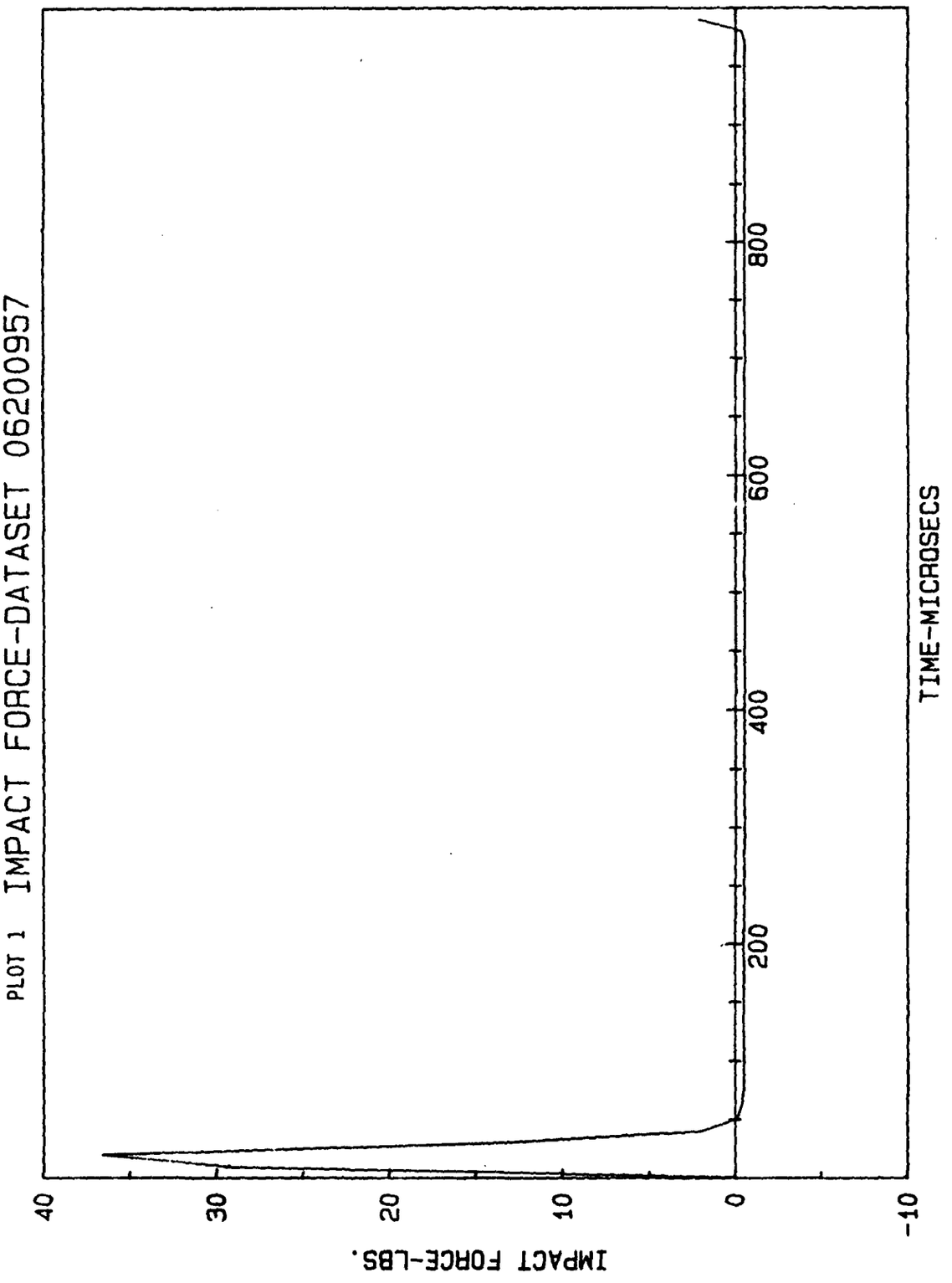
PLOT 1 IMPACT FORCE-DATASET 06200957
IMPACT FORCE-LBS.
40
30
20
10
0
-10
200
400
600
800
TIME-MICROSECS

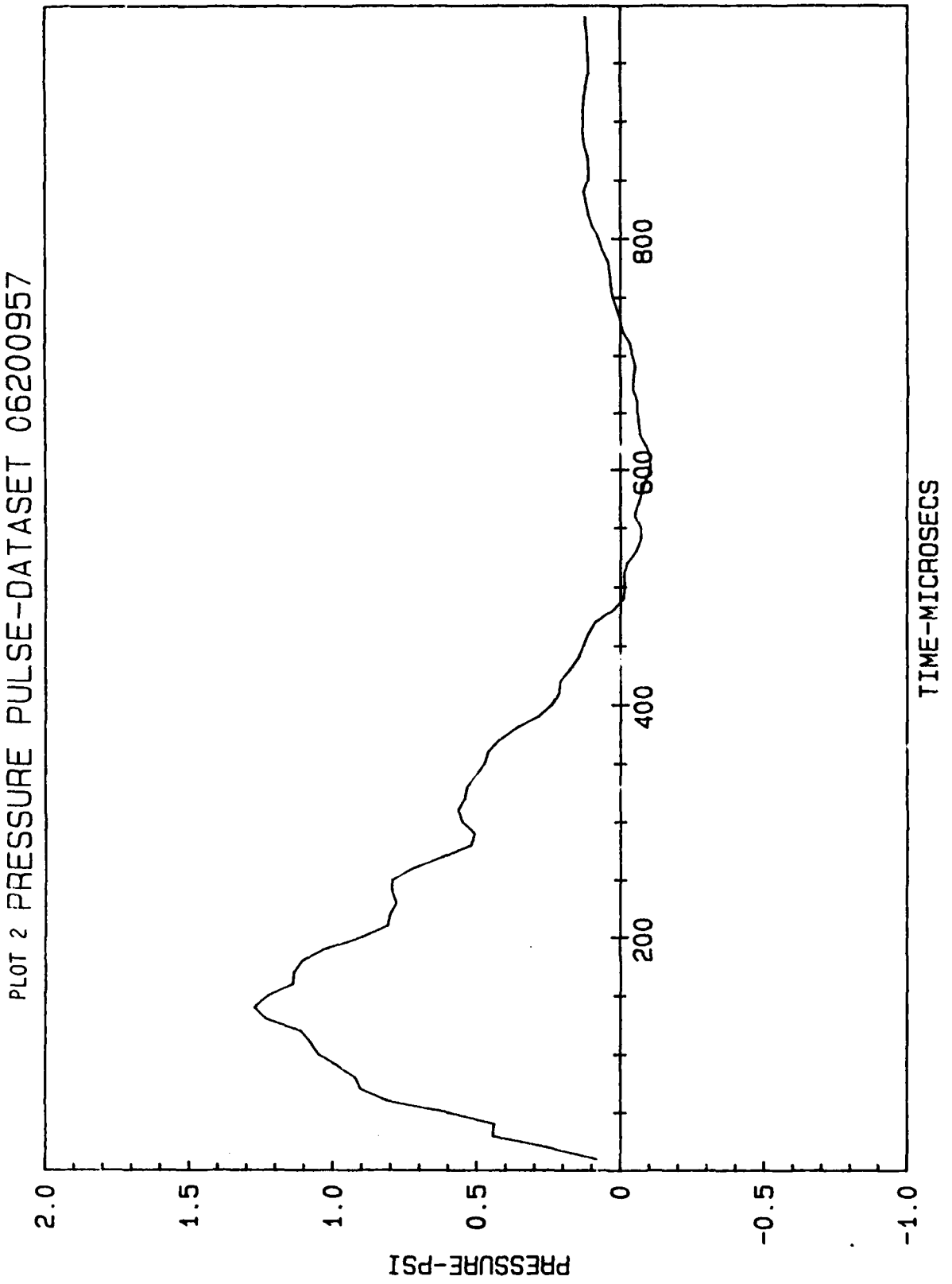
PLOT 2 PRESSURE PULSE-DATASET 06200957
PRESSURE-PSI
2.0
1.5
1.0
0.5
0
-0.5
-1.0
200
400
600
800
TIME-MICROSECS

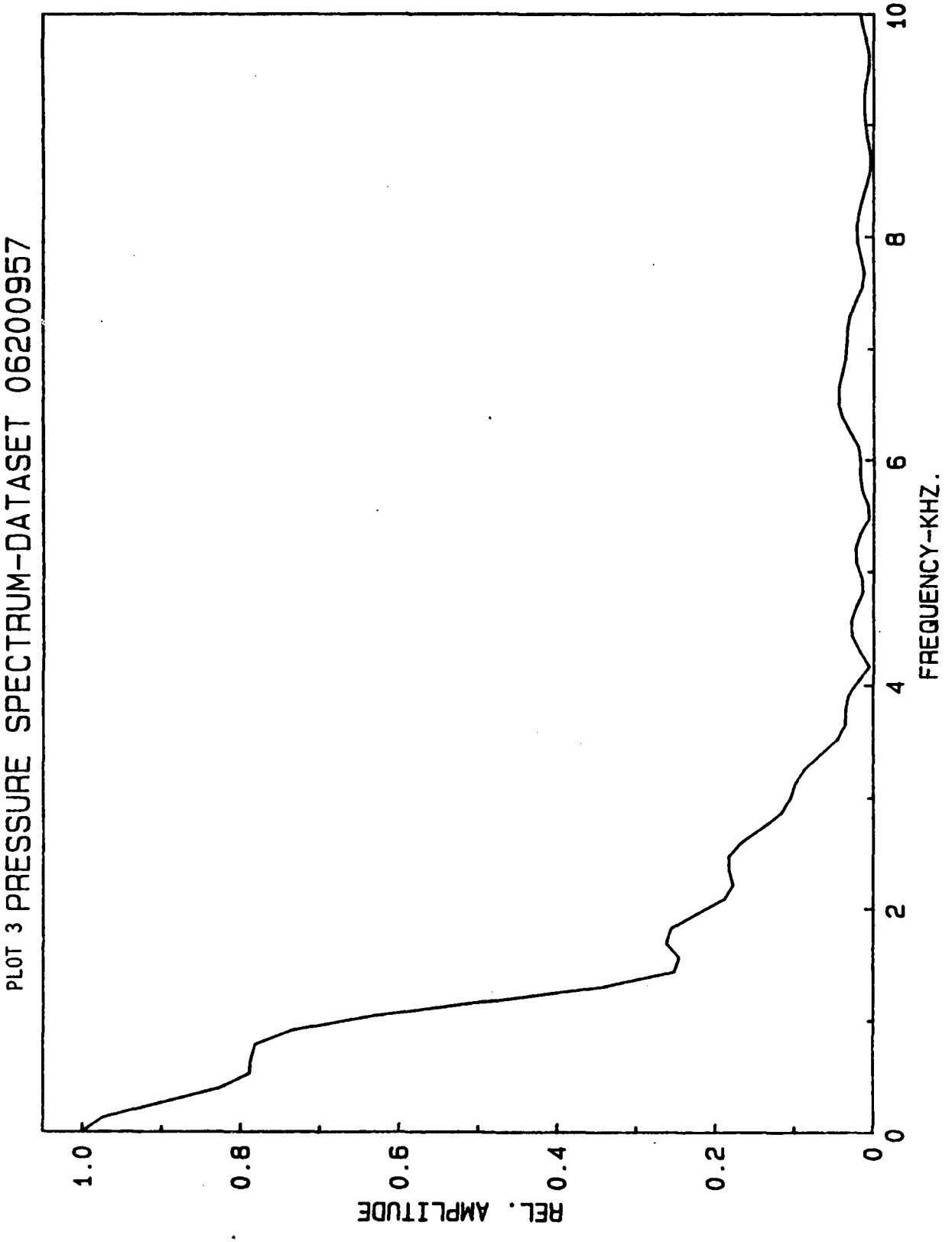
PLOT 3 PRESSURE SPECTRUM-DATASET 06200957
REL. AMPLITUDE
1.0
0.8
0.6
0.4
0.2
0
2
4
6
8
10
FREQUENCY-KHZ.

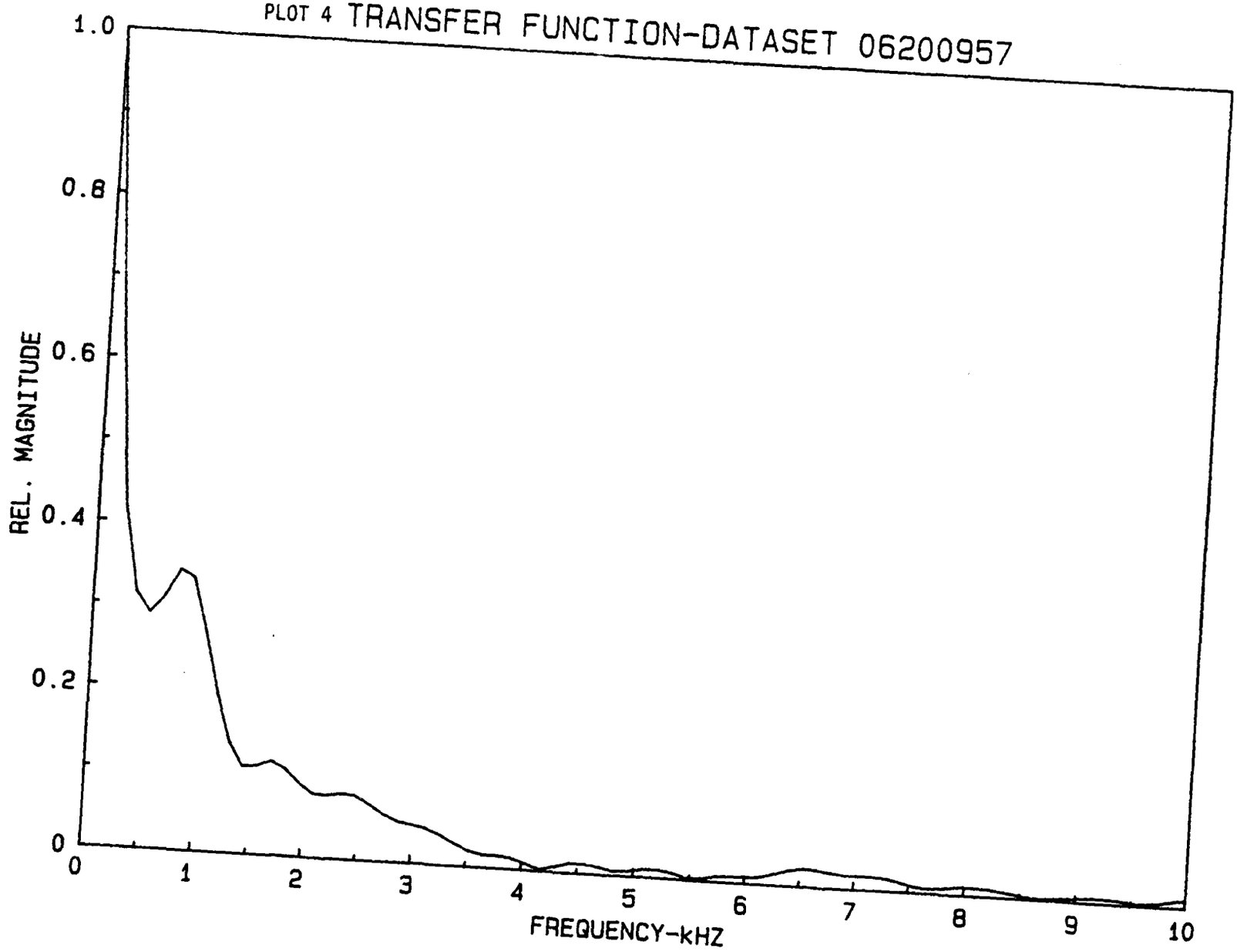
PLOT 4 TRANSFER FUNCTION-DATASET 06200957
REL. MAGNITUDE
1.0
0.8
0.6
0.4
0.2
0
0
1
2
3
4
5
6
7
8
9
10
FREQUENCY-kHZ

5.2 Analysis of Datasets 09130923

TEST CONDITIONS

Impact Source: Modal Hammer with steel tip.
Data Acquired: Force and Pressure.
Transducers: Force sensor in Modal Hammer.
Pressure sensor was standard microphone (PCB Model 112A22).
Signal Conditioning:
Force Sensor-PCB 480D06 @ X1 Gain (1.11 lbs/volt).
Pressure Sensor-PCB 480D06 @ X10 Gain (0.87 PSI/volt).
Bandwidth(both channels): 25 kHz.
Data Sampling Rate: 66,667 samples/sec/channel.
Sampling Interval: 0.001 Secs.

ANALYSIS NOTES

Same as Dataset 06200957.

DISCUSSION

The data for these plots was taken after the piston was modified to have a height and mass of approximately half that of the previous section. Also, the piston was suspended by a stiff disc spring rather than the air jets. Note the oscillatory nature of the Pressure signal shown in the second plot of this dataset and the shorter duration of the first pulse of the Pressure signal. The smaller piston mass allowed the piston to move more rapidly and to generate a pressure pulse having a faster rise time. However, the oscillatory nature of the pressure response (and the resultant spectral peak at about 3400 Hz.), is undesirable in an instrument to be used for calibration over a broad frequency range.

PLOTS FOR DATASET 09130923

1. IMPACT FORCE
2. PRESSURE PULSE
3. PRESSURE SPECTRUM
4. TRANSFER FUNCTION

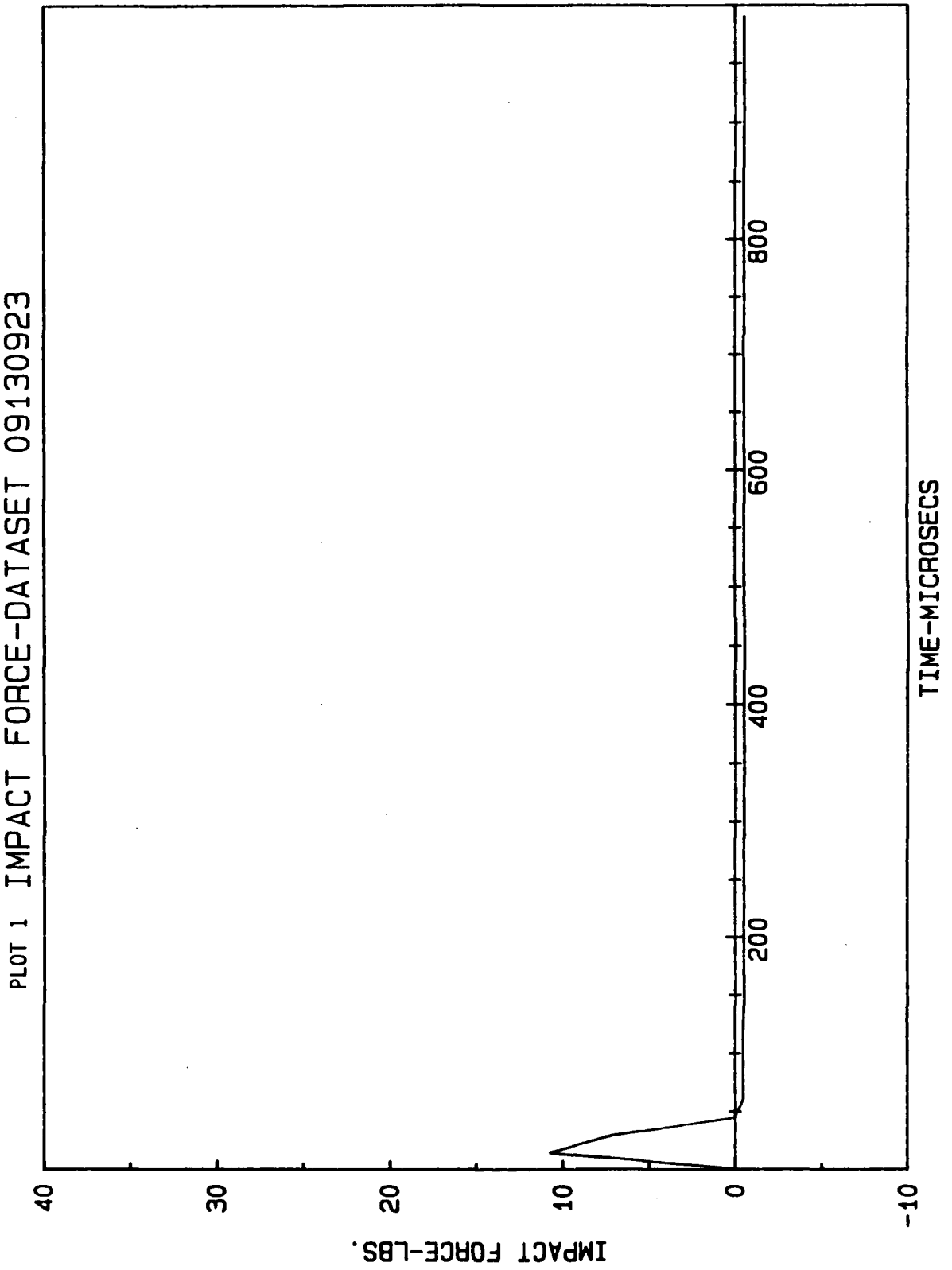
PLOT 1 IMPACT FORCE-DATASET 09130923
IMPACT FORCE-LBS.
40
30
20
10
0
-10
200
400
600
800
TIME-MICROSECS

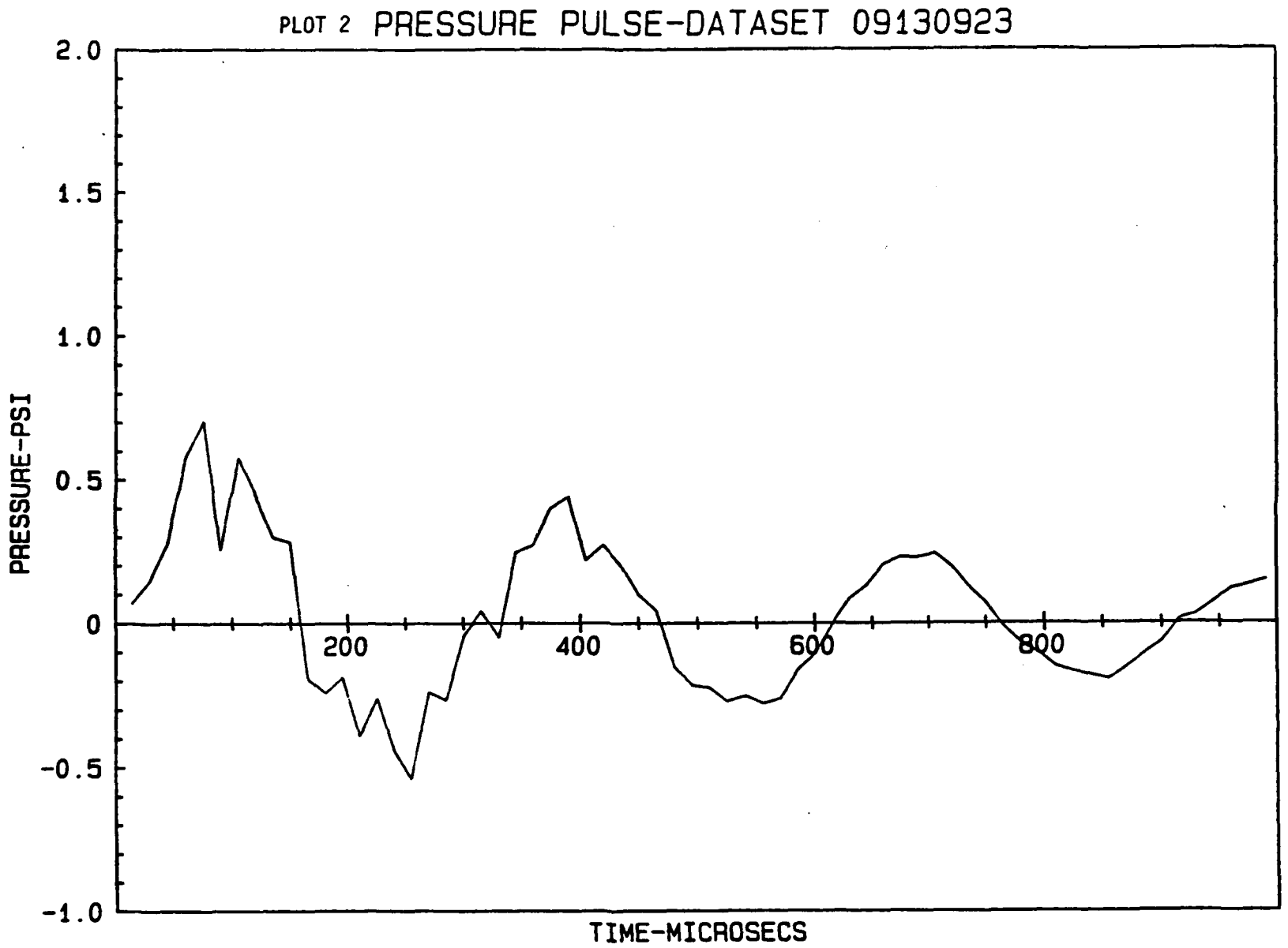
PLOT 2 PRESSURE PULSE-DATASET 09130923
2.0
1.5
1.0
0.5
0
-0.5
-1.0
PRESSURE-PSI
200
400
600
800
TIME-MICROSECS

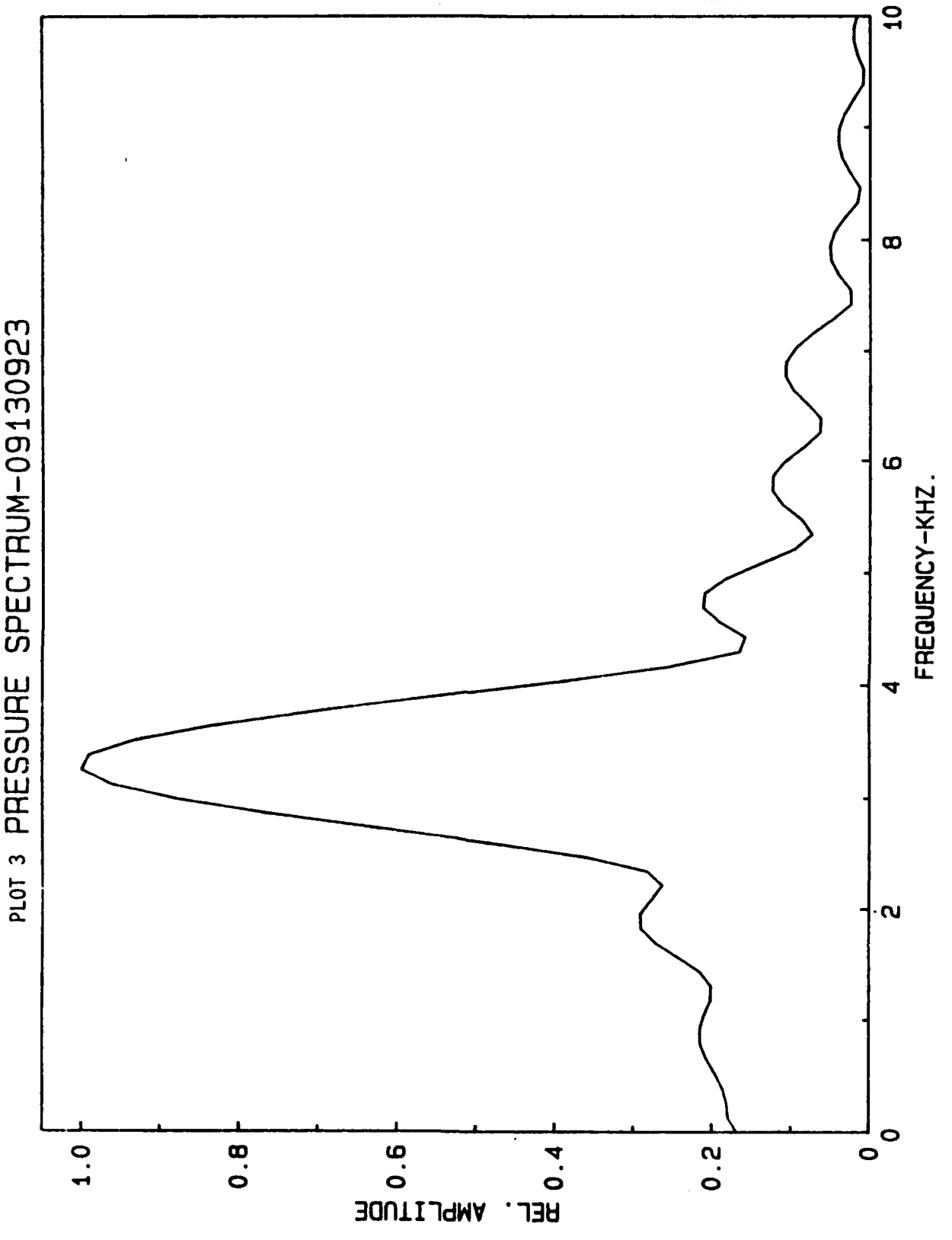
PLOT 3 PRESSURE SPECTRUM-09130923
REL. AMPLITUDE
1.0
0.8
0.6
0.4
0.2
0
0
2
4
6
8
10
FREQUENCY-KHZ.

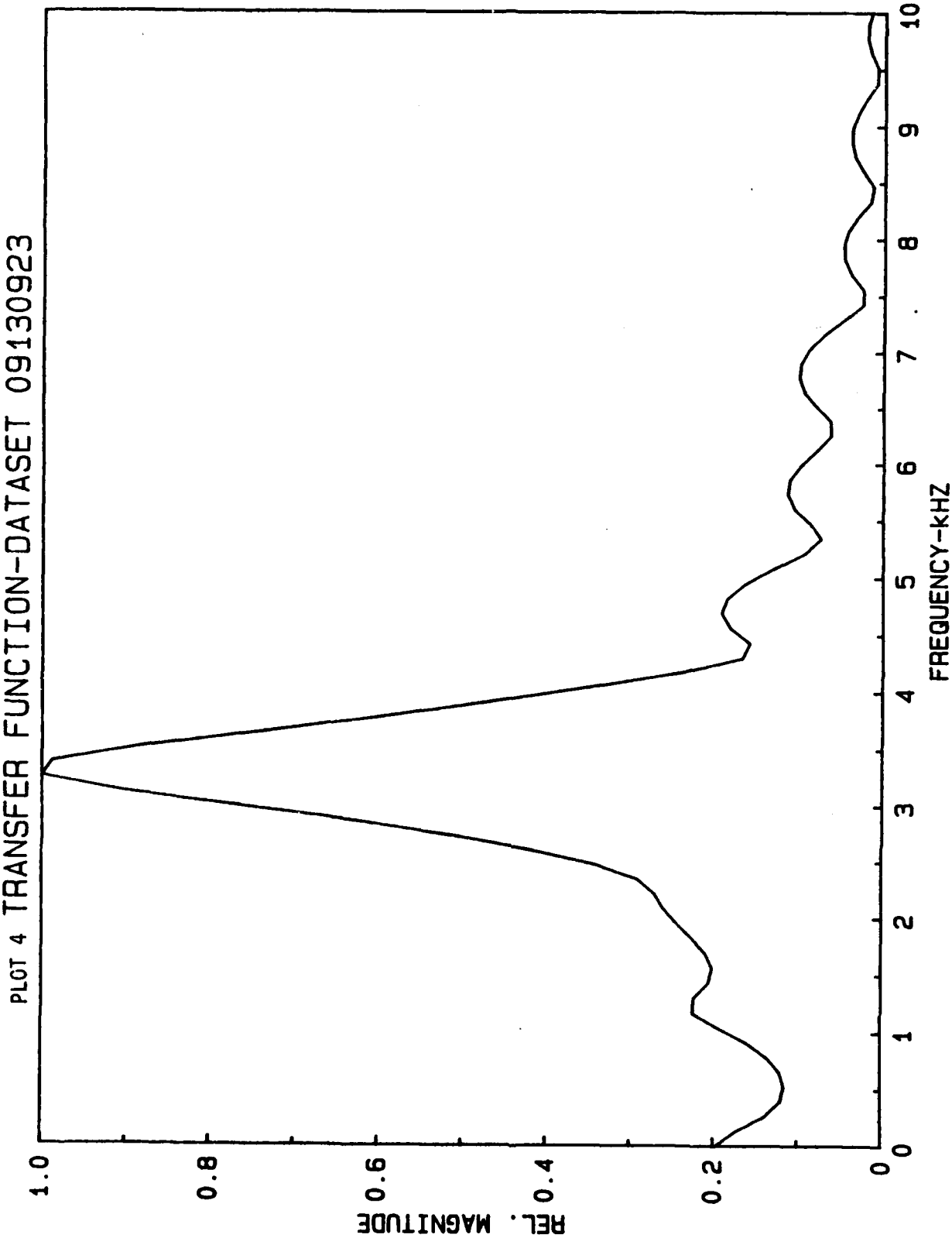
PLOT 4 TRANSFER FUNCTION-DATASET 09130923
REL. MAGNITUDE
1.0
0.8
0.6
0.4
0.2
0
0
1
2
3
4
5
6
7
8
9
10
FREQUENCY-KHZ

5.3 Analysis of Datasets 09141425

TEST CONDITIONS

Impact Source: Modal Hammer with steel tip and 0.006-inch polyester pad on the impact point.
Data Acquired: Force, Piston Acceleration, and Pressure.
Transducers: Force sensor in Modal Hammer.
Accelerometer mounted in piston along center axis(PCB Model 309A).
Pressure sensor was standard microphone (PCB Model 112A22).
Signal Conditioning:
Force-PCB 480D06 @ X1 Gain (1.11 lbs/volt)
Acceleration-PCB 480D06 @ X1 Gain (194.6 G's/volt
Pressure-PCB 480D06 @ X10 Gain (0.87 PSI/volt)
Bandwidth(both channels): 25 kHz.
Data Sampling Rate: 66,667 samples/sec/channel.
Sampling Interval: 0.001 Secs.

ANALYSIS NOTES

$$\text{Transfer Function } H(w) = \frac{S_p(w)}{S_f(w)}$$

where $S_p(w)$ and $S_f(w)$ are the Fourier Transforms of the Pressure and Force signals.

Before taking the transforms, any DC offset existing at the start of the sampling interval was subtracted from the force signal. A cosine taper window was applied to each signal, starting after the trailing edge of the main signal pulse. Then, zeros were added to create a 512 point dataset.

DISCUSSION

A 0.006-inch polyester layer was added to the impact button. Additionally, an oil film was introduced as a lubricant between the piston and cylinder walls. The lubricant was Convalube-C, a non-corrosive formulated phthalate ester compound which also acted to damp the piston movement.

It should be noted that the oscillations on the Pressure signal are much reduced when compared to the previous dataset. Although the impact force signal is of longer duration than the previous two dataset examples (as a result of the polyester layers on the impact button), the resulting pressure pulse duration is only about 150 microseconds. It should also be noted that the pressure pulse energy is

relatively uniformly distributed up to about 4 kHz. Thus, at this point in the project it was felt that the characteristics of the pressure pulse generated by an impact on the piston were acceptable, and in fact were the best that had been observed up to this point in the project.

The additional plots in this section are of the transfer function of the microphone output and the force impact. The microphone used here was a high frequency piezoelectric type known to have a flat frequency response to beyond 10 kHz.(PCB Model 112A22). The primary observation to be made from these plots is that a well-behaved transfer function resulted from this test.

PLOTS FOR DATASET 09141425

1. IMPACT FORCE
2. PRESSURE PULSE
3. PRESSURE SPECTRUM
4. TRANSFER FUNCTION
5. TRANSFER FUNCTION(dB)

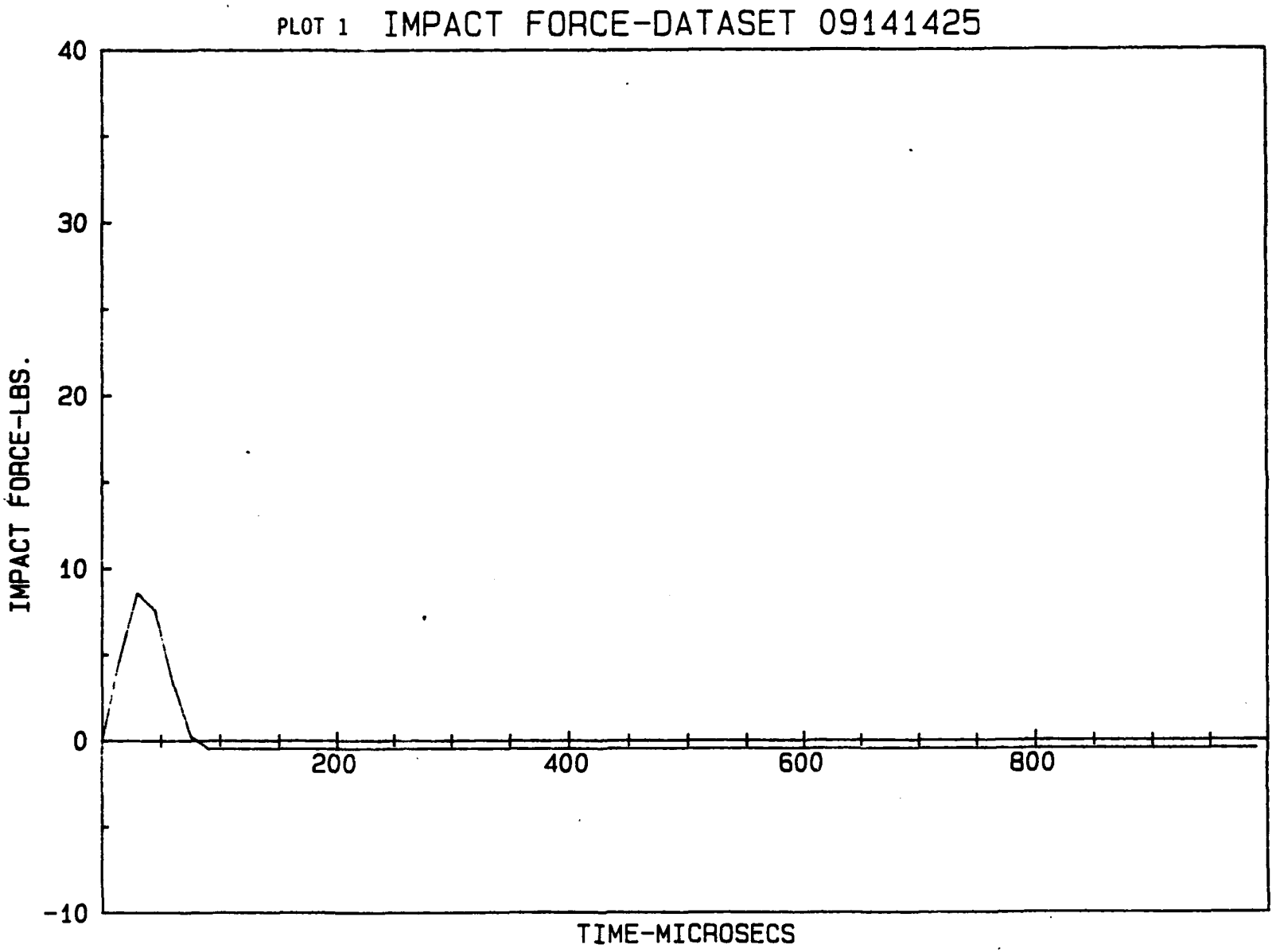
PLOT 1 IMPACT FORCE-DATASET 09141425
40
30
20
10
0
-10
IMPACT FORCE-LBS.
200
400
600
800
TIME-MICROSECS

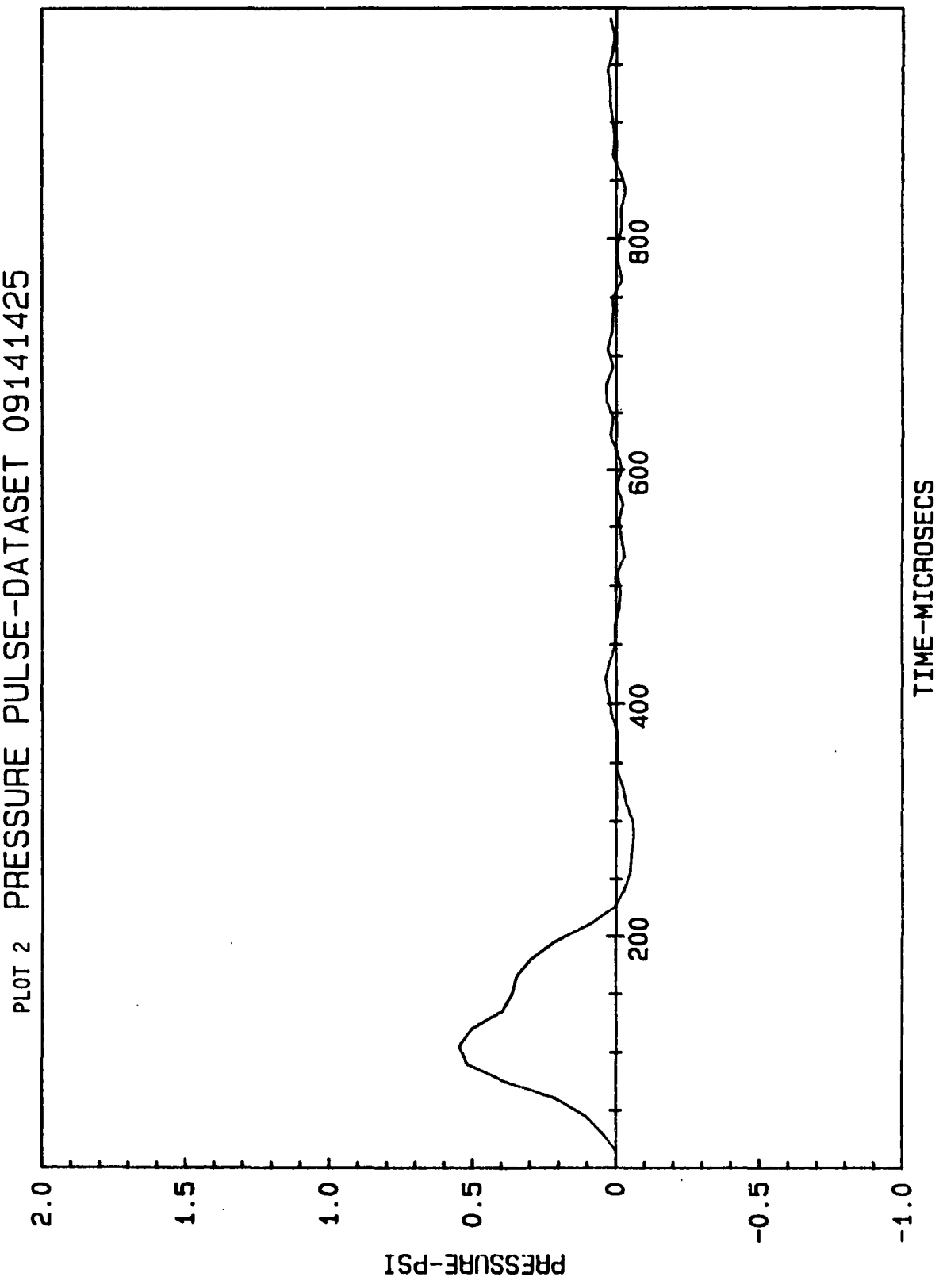
PLOT 2 PRESSURE PULSE-DATASET 09141425
PRESSURE-PSI
2.0
1.5
1.0
0.5
0
-0.5
-1.0
200
400
600
800
TIME-MICROSECS

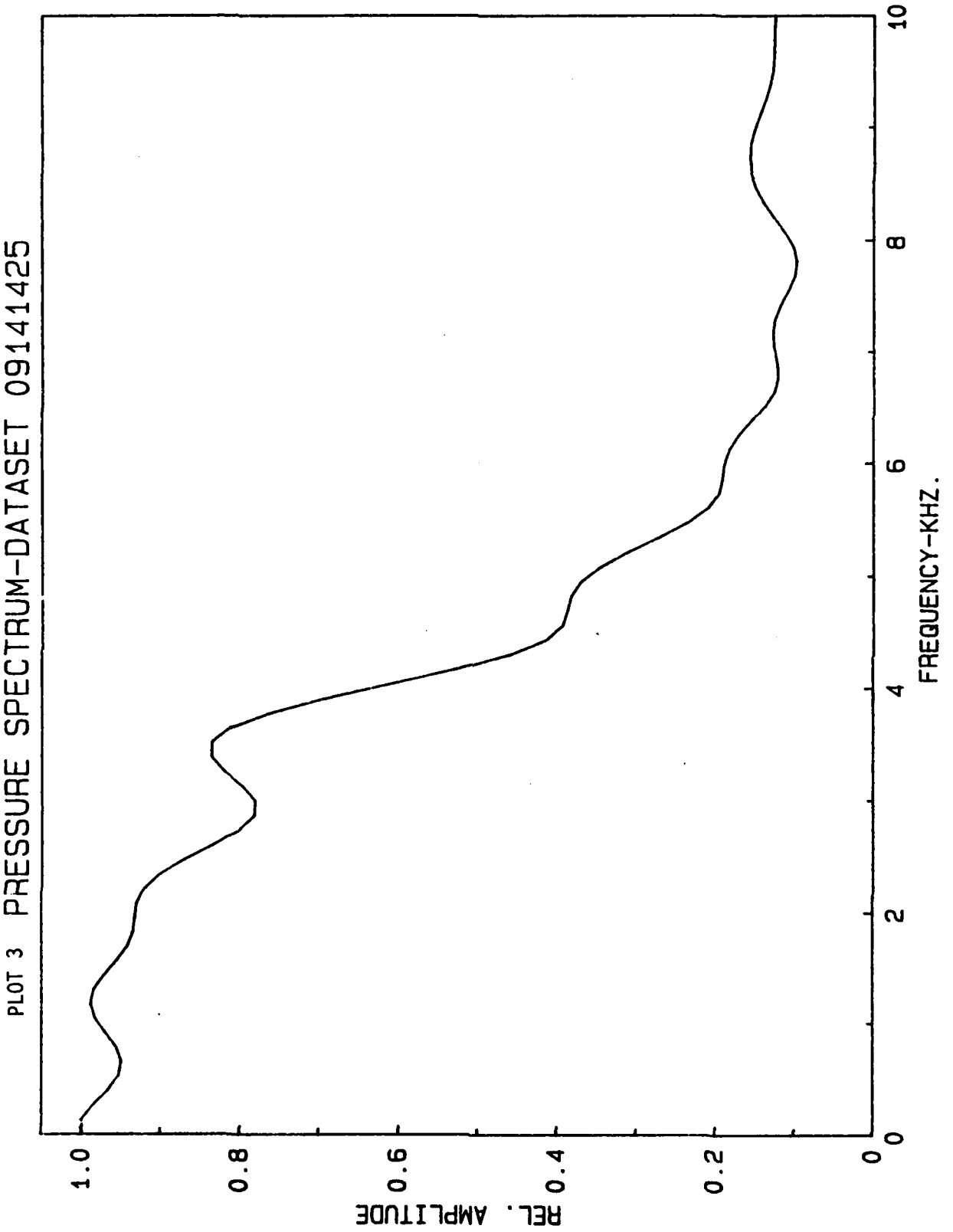
PLOT 3 PRESSURE SPECTRUM-DATASET 09141425
REL. AMPLITUDE
1.0
0.8
0.6
0.4
0.2
0
0
2
4
6
8
10
FREQUENCY-KHZ.

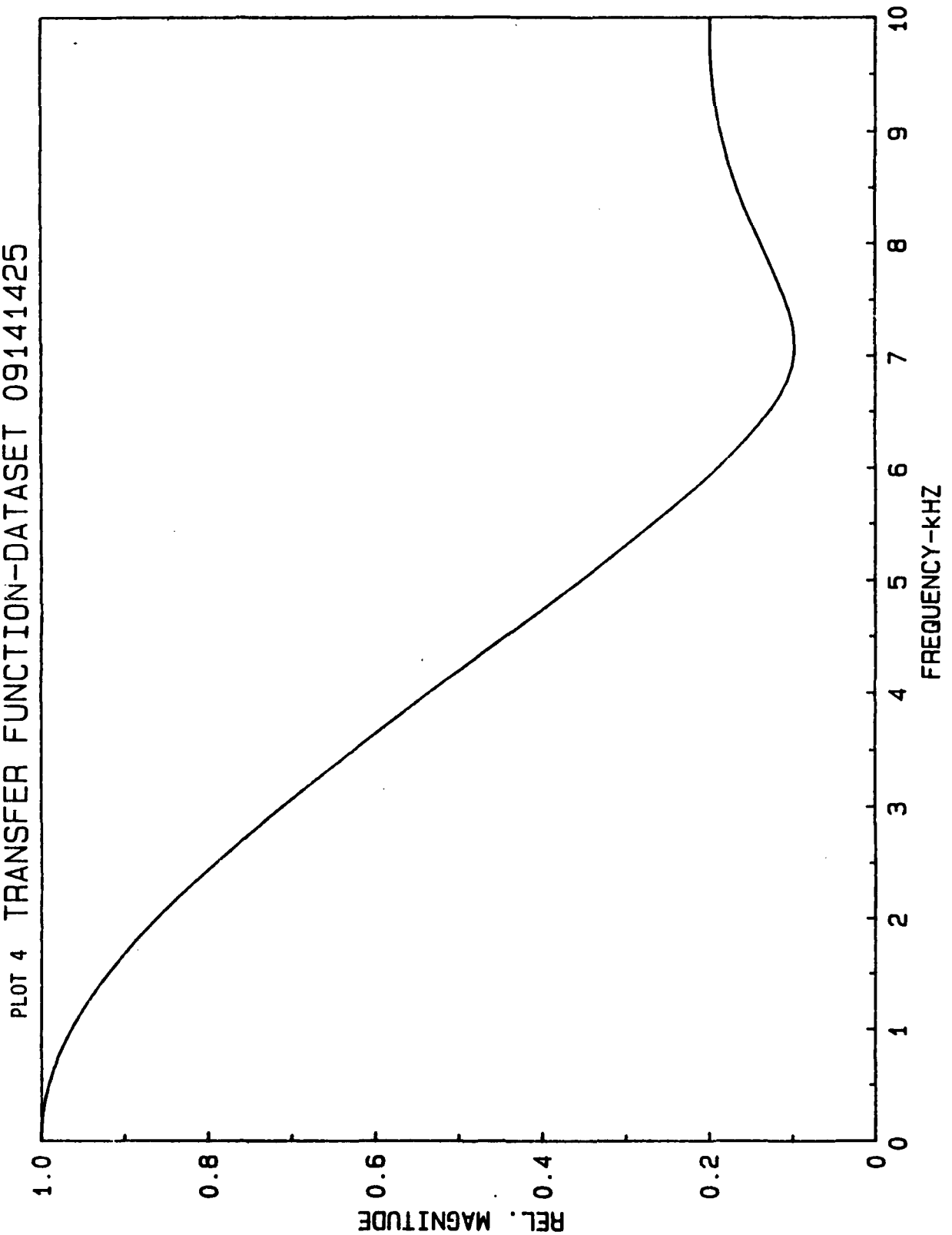
PLOT 4 TRANSFER FUNCTION-DATASET 09141425
REL. MAGNITUDE
1.0
0.8
0.6
0.4
0.2
0
0
1
2
3
4
5
6
7
8
9
10
FREQUENCY-kHZ

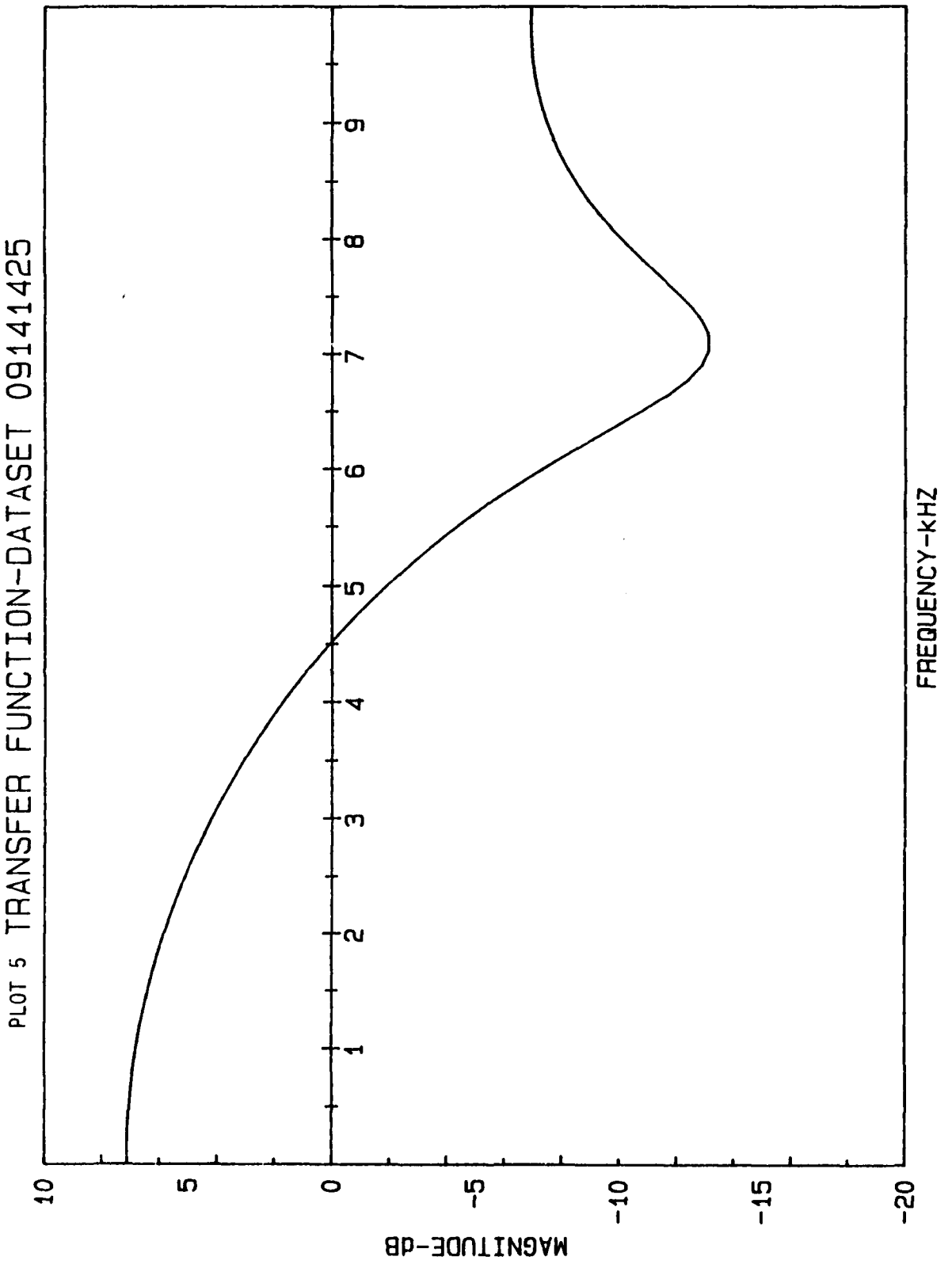
PLOT 5 TRANSFER FUNCTION-DATASET 09141425
MAGNITUDE-dB
10
5
0
-5
-10
-15
-20
1
2
3
4
5
6
7
8
9
FREQUENCY-kHZ

5.4 Analysis of Datasets 09141422...09141426

TEST CONDITIONS

Same as for Dataset 09141425, Section 5.3

ANALYSIS NOTES

Individual Transfer Functions were computed using the following expression:

$$H(w) = \frac{G_{pf}(w)}{G_{ff}(w)}$$

where $G_{pf}(w) = S_p(w)*S_f^*(w)$ is the Cross Power Spectrum of the pressure and force signals, which is obtained by multiplying the transform of the pressure signal by the complex conjugate of the transform of the force signal; and $G_{ff}(w) = S_f(w)*S_f^*(w)$.

This expression for H(w) gives results similar to the expression for H(w) in Section 5.3 but offers the potential for reduction of the effects of random noise if the transforms of several datasets are averaged, i.e.

$$H(w) = \overline{G_{pf}(w)} / \overline{G_{ff}(w)}$$

Also, the Cross Power Spectrum was used to compute the Coherence Function shown in the last plot of this section.

$$\text{Coherence Function} = \frac{G_{pf}(w)*G_{fp}(w)}{G_{ff}(w)*G_{pp}(w)}$$

where each term is the RMS average of several observations. The data shown is the Coherence Function which resulted from the averaging of 5 Datasets.

DISCUSSION

The first plot in this section shows the magnitude of the transfer function of five independent impacts of similar peak force. The second plot shows the magnitude of the transfer function for three independent impacts of 5 lbs., 10 lbs., and 15 lbs. peak force.

As can be seen from the transfer function plots at the 3 impact levels, there is approximately a 5 dB spread in the magnitude of the transfer functions at some mid frequencies. It was for this reason that the decision was made to add a reference microphone to the fixture.

PLOTS FOR DATASETS 09141423...09141426

1. TRANSFER FUNCTIONS RESULTING FROM 5 SIMILAR IMPACTS
2. TRANSFER FUNCTIONS RESULTING FROM 3 DIFFERENT IMPACTS
3. COHERENCE FUNCTION (FROM AVERAGE OF 5 SIMILAR IMPACTS)

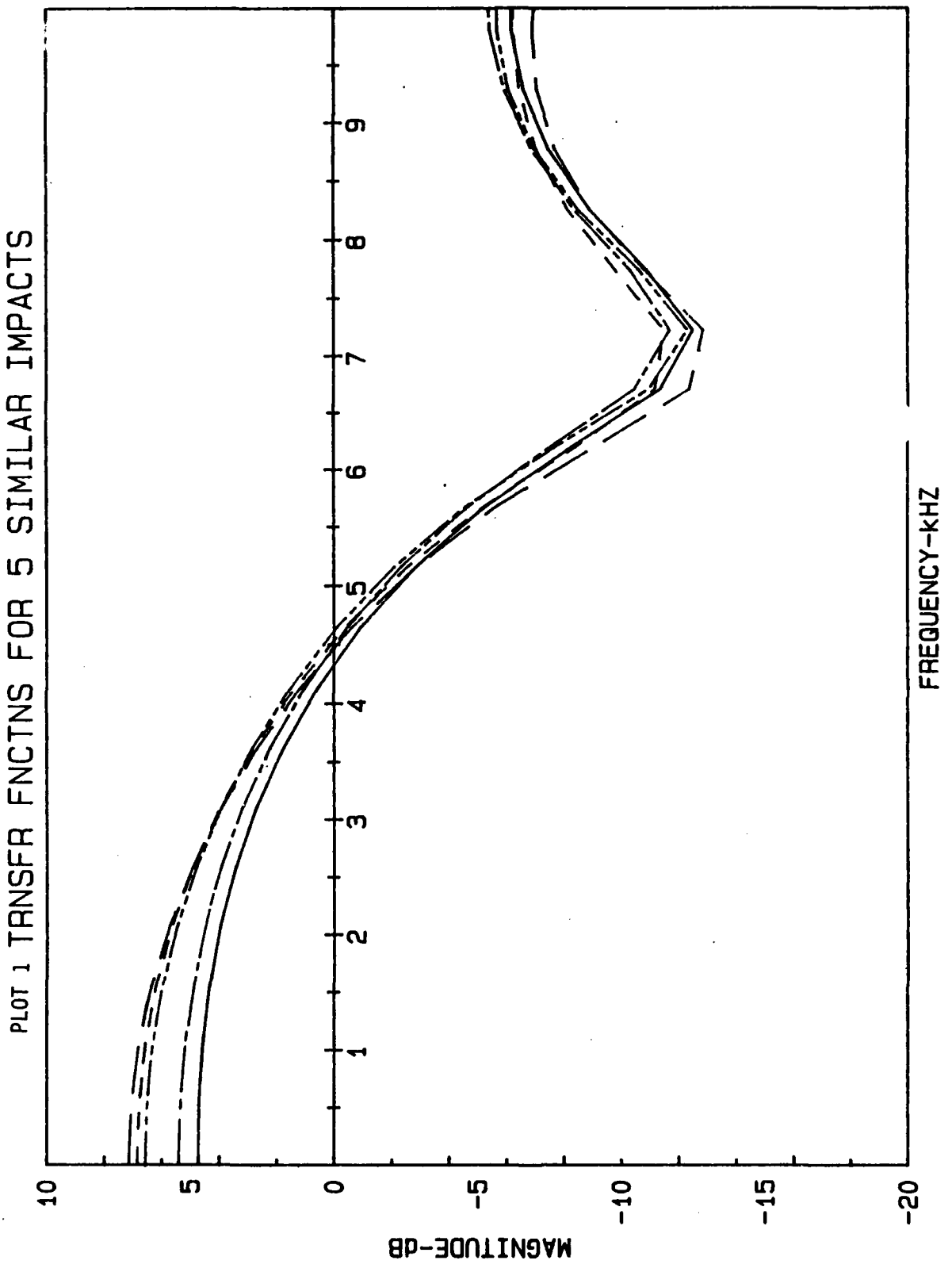
PLOT 1 TRNSFR FNCTNS FOR 5 SIMILAR IMPACTS
MAGNITUDE-dB
10
5
0
-5
-10
-15
-20
1
2
3
4
5
6
7
8
9
FREQUENCY-kHZ

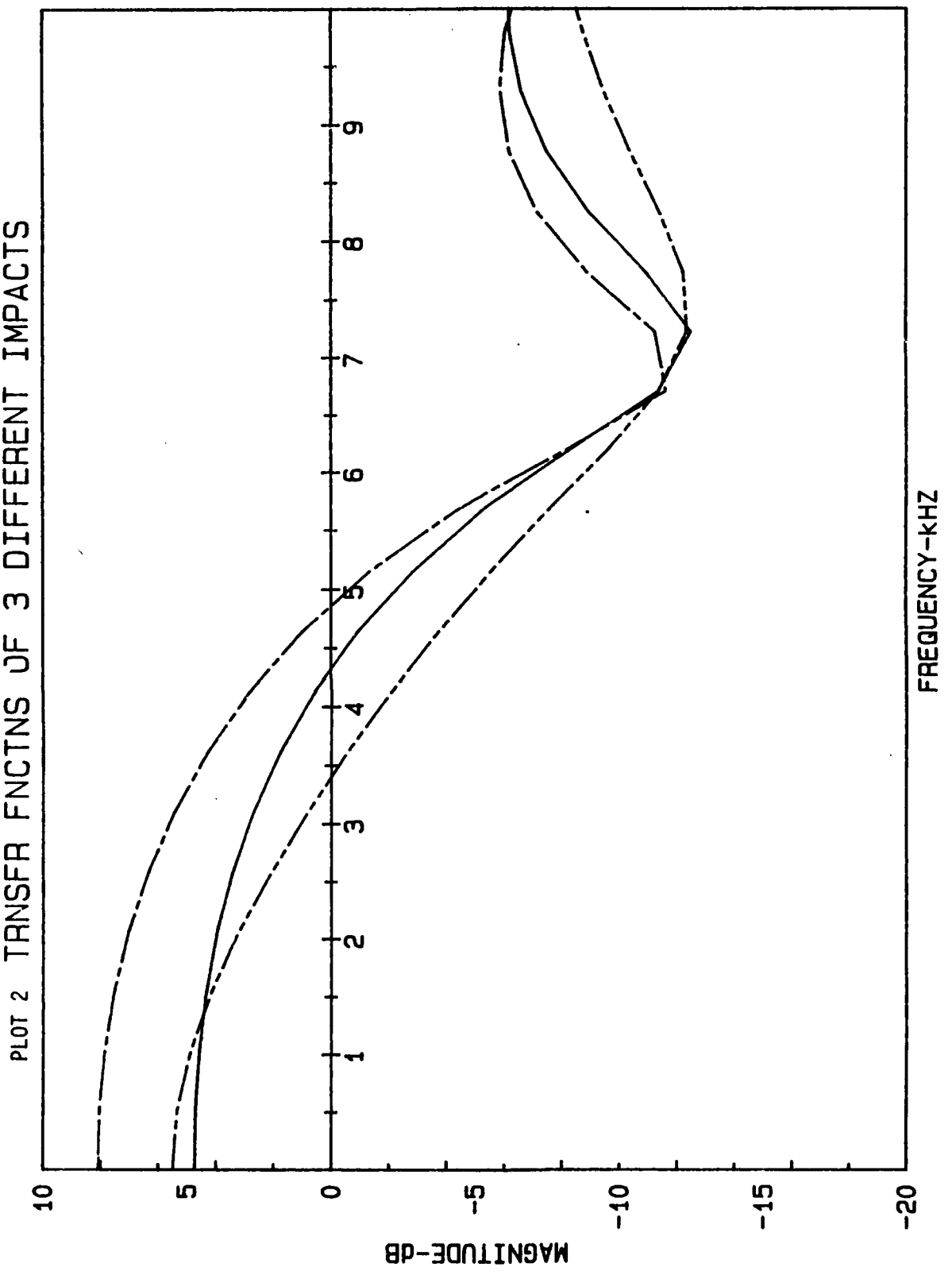
PLOT 2 TRNSFR FNCTNS OF 3 DIFFERENT IMPACTS
MAGNITUDE-dB
10
5
0
-5
-10
-15
-20
1
2
3
4
5
6
7
8
9
FREQUENCY-kHZ

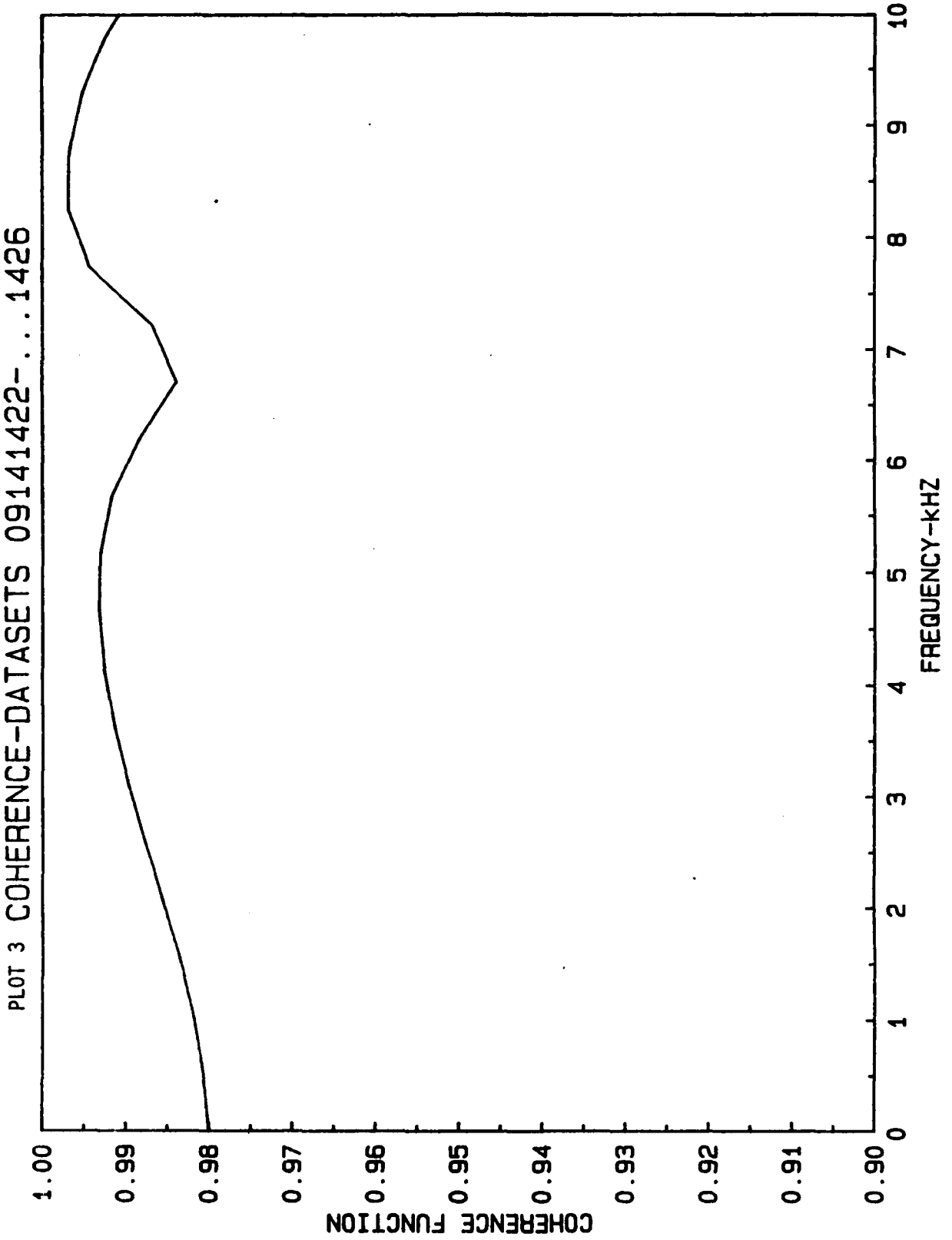
PLOT 3 COHERENCE-DATASETS 09141422-....1426
COHERENCE FUNCTION
1.00
0.99
0.98
0.97
0.96
0.95
0.94
0.93
0.92
0.91
0.90
0
1
2
3
4
5
6
7
8
9
10
FREQUENCY-kHZ

5.5 Microphone Calibration Test Data

These test results illustrate the performance of the Prototype Impulse Calibration Unit configured in its final form as a prototype microphone calibration device. In all cases, two microphones are used. One microphone, whose characteristics were assumed to be known, was considered the "Reference" microphone. A second microphone was considered to be the microphone under test or the "Unknown" microphone. A test impact was generated with the Modal Hammer generally at a level sufficient to produce a peak pressure of between 0.1 and 1.0 PSI within the cavity. Beginning at the time of the impact (as determined by using the force transducer signal as a trigger), microphone output data was acquired at 100,000 samples per second per channel from both microphones. Do to a problem with the Analog Devices RTI-860 board in conjunction with the SNAPSHOT software, it was not possible to use the simultaneous sample-and-hold feature of the board, so there is a 5 microsecond offset between samples taken on the Reference and the Unknown channels.

The microphone output signals were amplified and bandlimited to 10 kHz. by solid-state amplifiers having a fixed, known gain and measured response characteristics. For most of the testing, identical amplifiers were used for both the Reference and the Unknown microphone channels. This arrangement corresponds to the Frequency Domain Diagram shown in Figure 5 of this report. In general, the test data plots in this section consist of transfer function and phase plots resulting from the solution of equation (3) using the acquired microphone data. Test results are included for several different "Unknown" microphones, several different pressure levels, and for cases where a "window function" has been applied to the time domain signals before taking the transforms.

Each plot is separately discussed below. The single-point sensitivity value for the "Unknown" microphone, which was measured independently by the Air Force Flight Dynamics Laboratory (FIBG), is noted as a dashed line on the plots.

5.5.1 Analysis of Dataset 05020951

COMMON CONDITIONS

Reference Microphone: PCB Model 112A22
Reference Channel Gain: 50.2 (flat to within 1% to beyond 6 kHz.).
Reference Microphone Sensitivity (measured by FIBG): 118 mv./PSI.
Unknown Microphone: Gulton Type MVA-2400, 1/4 inch, S/N 1011.
Unknown Channel Gain: 100.6 (Normalized Frequency Response Function = $G_u(w)$).

Unknown Microphone Sensitivity (measured by FIBG):
150.7 mv./PSI.

Transfer Function Equation:

$$H_u(w) = \frac{K_r(w)*H_r(w)}{K_u(w)} * \frac{O_u(w)}{O_r(w)}$$

Since $K_r(w) = 50.2$, $H_r(w) = 0.118$, and $K_u(w) = 100.6*G_u(w)$, then

$$H_u(w) = \frac{0.05888}{G_u(w)} * \frac{O_u(w)}{O_r(w)}$$

Approximate Peak Pressure: 0.4 PSI.

SPECIFIC CONDITIONS APPLICABLE TO ONLY THE LISTED PLOT

05020951-1
A COS taper window was applied to the Reference and to the Unknown time domain signals before taking the transforms.

05020951-2
A COS taper window was applied to the Reference and to the Unknown time domain signals before taking the transforms. The mean value of each of the time domain signals over the sampling interval (DC component), was subtracted from each sample value before taking the transforms.

05020951-3
No window function was used. The mean value of each of the time domain signals over the sampling interval (DC component), was subtracted from each sample value before taking the transforms.

05020951-4
Four independent impacts at similar peak impact levels are overlayed on a common plot. All transfer functions are calculated using the same specific conditions as plot 05020951-1

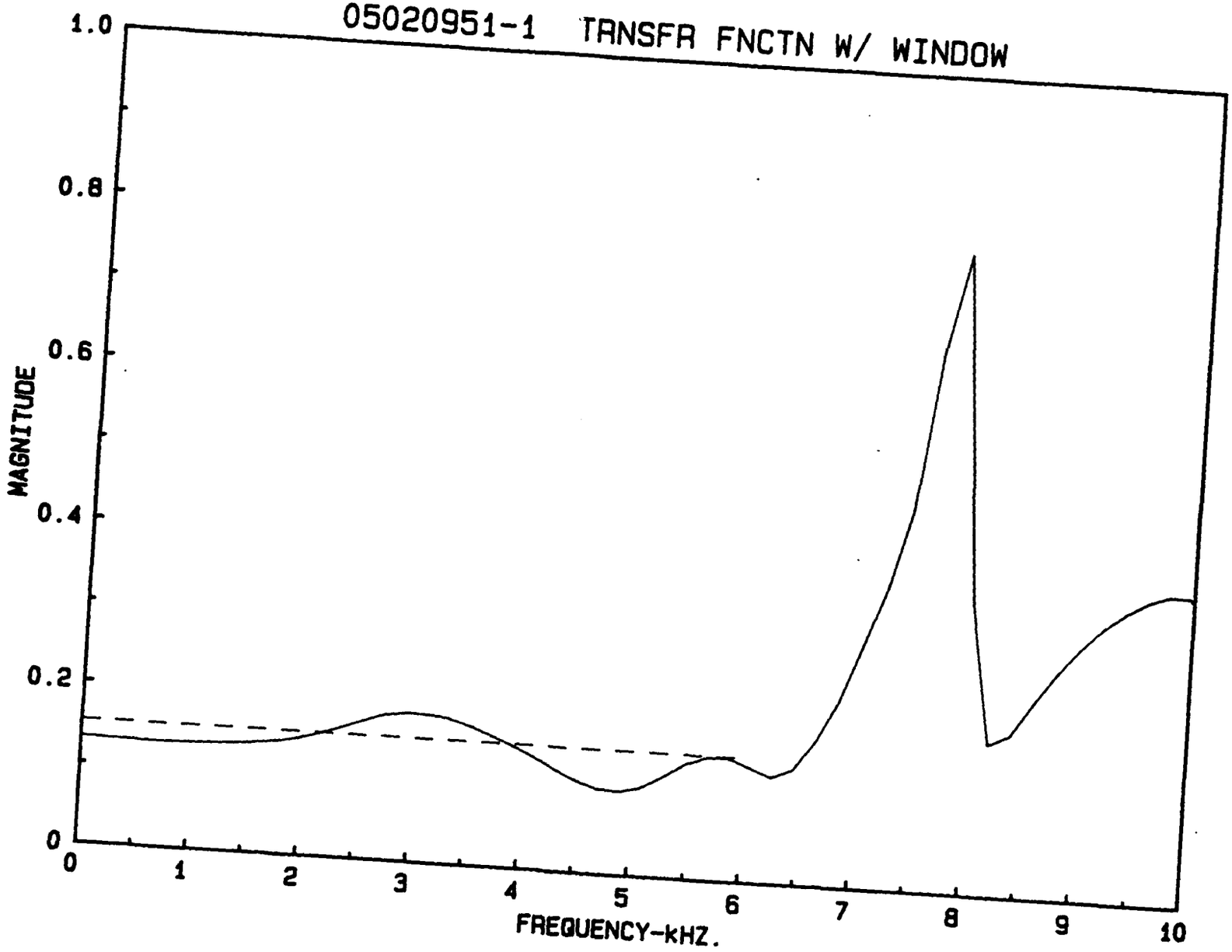
05020951-1 TRNSFR FNCTN W/ WINDOW
1.0
0.8
0.6
0.4
0.2
0
MAGNITUDE
0
1
2
3
4
5
6
7
8
9
10
FREQUENCY-kHZ.

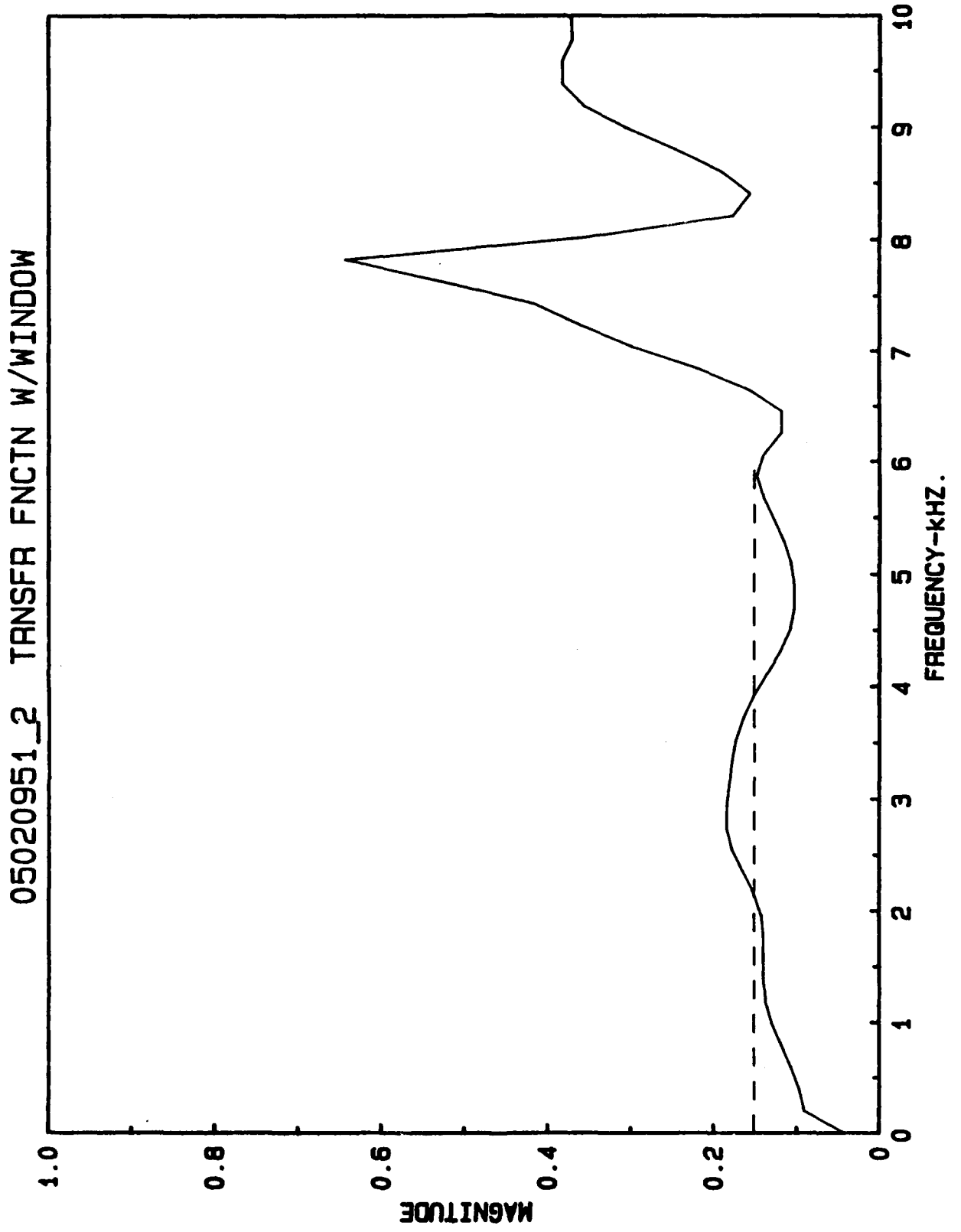
05020951_2 TRNSFR FNCTN W/WINDOW
MAGNITUDE
1.0
0.8
0.6
0.4
0.2
0
0
1
2
3
4
5
6
7
8
9
10
FREQUENCY-kHZ.

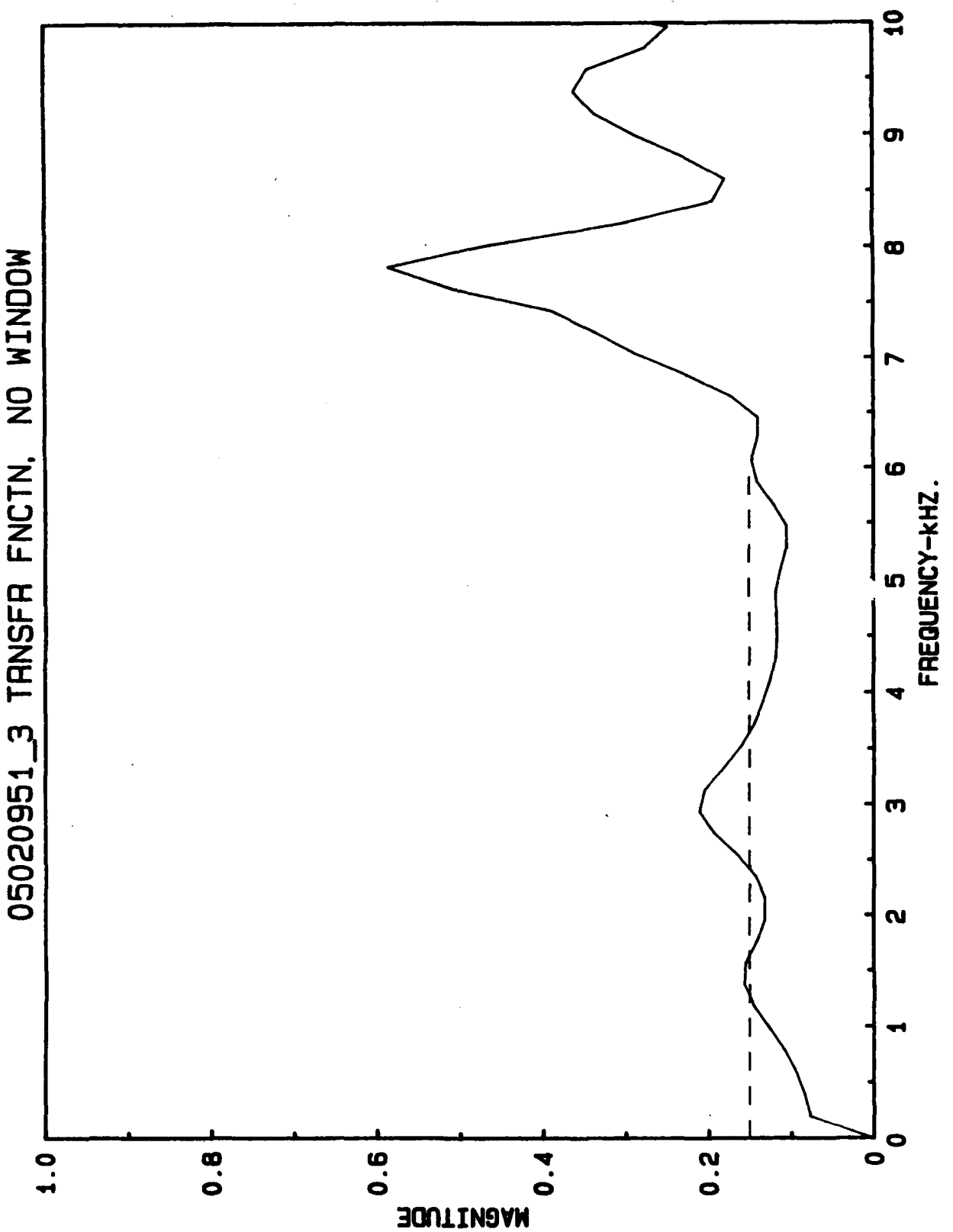
05020951_3 TRNSFR FNCTN, NO WINDOW
MAGNITUDE
1.0
0.8
0.6
0.4
0.2
0
0
1
2
3
4
5
6
7
8
9
10
FREQUENCY-kHZ.

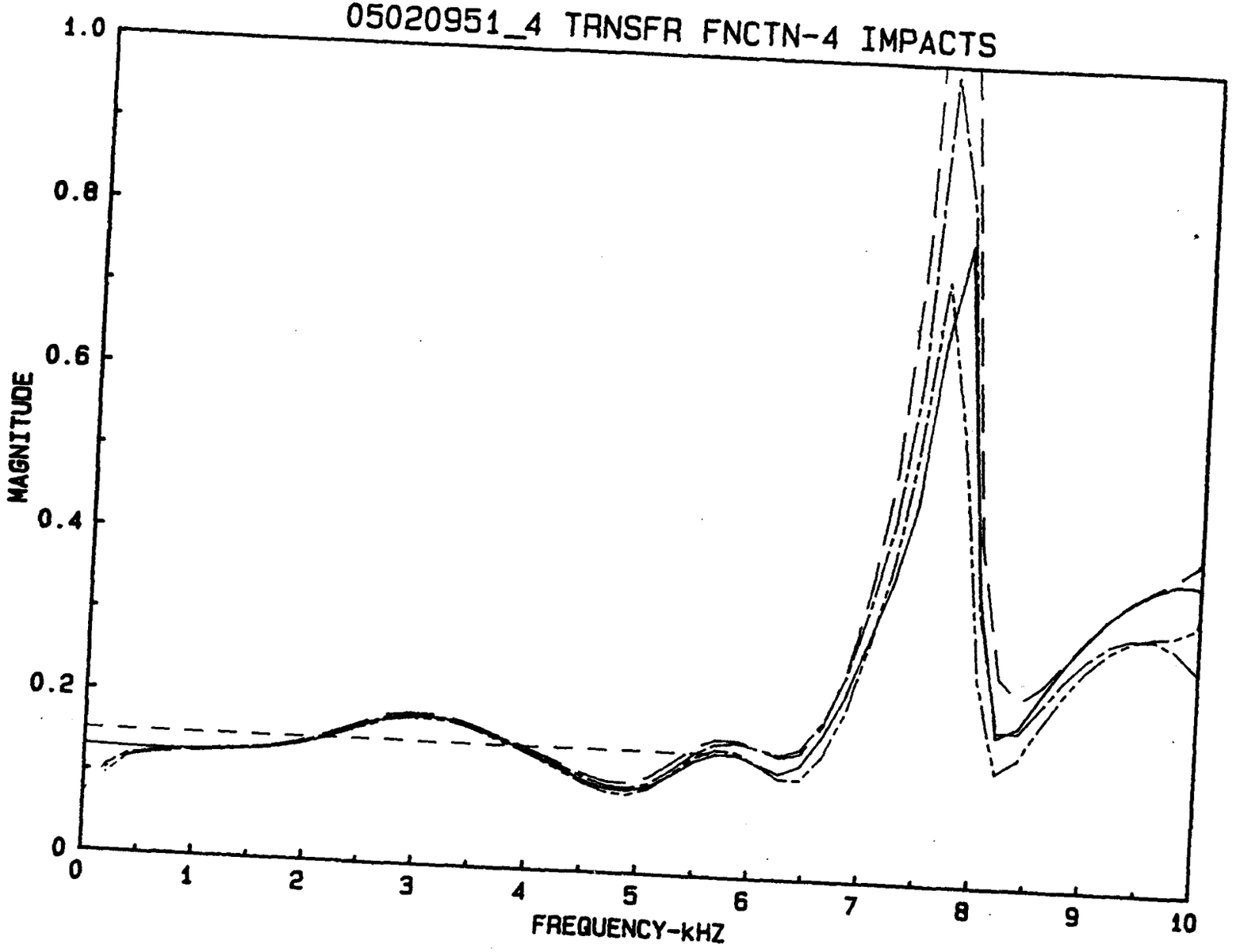
05020951_4 TRNSFR FNCTN-4 IMPACTS
MAGNITUDE
1.0
0.8
0.6
0.4
0.2
0
0
1
2
3
4
5
6
7
8
9
10
FREQUENCY-kHZ

5.5.2 Analysis of Dataset 05021004

COMMON CONDITIONS

Reference Microphone: PCB Model 112A22
Reference Channel Gain: 50.2 (flat to within 1% to beyond 6 kHz.).
Reference Microphone Sensitivity (measured by FIBG): 118 mv./PSI.
Unknown Microphone: Gulton Type MVA-2400, 1/4 inch, S/N 1008.
Unknown Channel Gain: 100.6 (Normalized Frequency Response Function = $G_u(w)$).
Unknown Microphone Sensitivity (measured by FIBG): 117.9 mv./PSI.
Transfer Function Equation:

$$H_u(w) = \frac{K_r(w)*H_r(w)}{K_u(w)} * \frac{O_u(w)}{O_r(w)}$$

Since $K_r(w) = 50.2$, $H_r(w) = 0.118$, and $K_u(w) = 100.6*G_u(w)$, then

$$H_u(w) = \frac{0.05888}{G_u(w)} * \frac{O_u(w)}{O_r(w)}$$

Approximate Peak Pressure: 0.4 PSI.

SPECIFIC CONDITIONS APPLICABLE TO ONLY THE LISTED PLOT

05021004-1
Four independent impacts at similar peak impact levels are overlayed on a common plot. The Reference and the Unknown time domain signals have been modified by a COS taper window before taking the transforms.

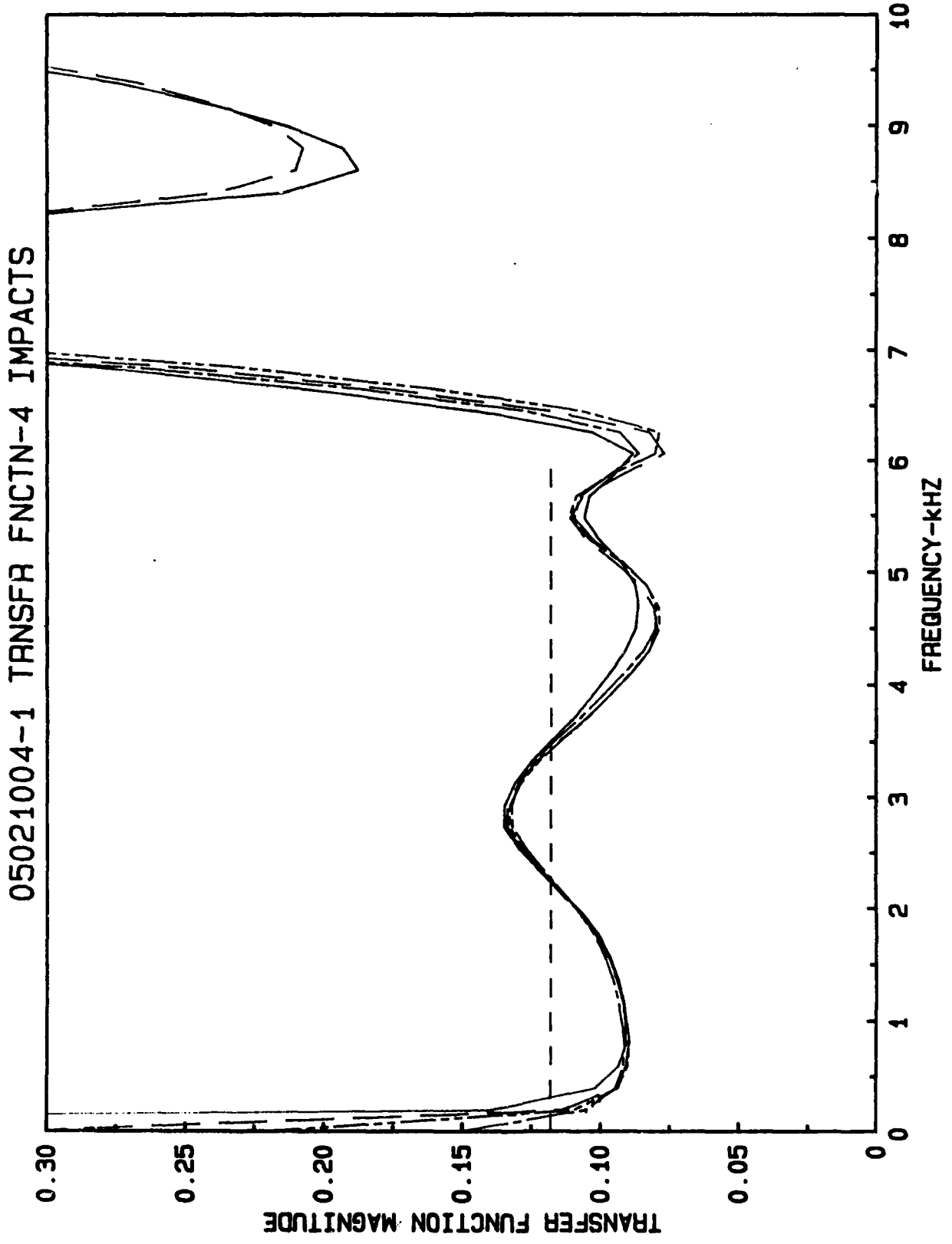
05021004-1 TRNSFR FNCTN-4 IMPACTS
TRANSFER FUNCTION MAGNITUDE
0.30
0.25
0.20
0.15
0.10
0.05
0
1
2
3
4
5
6
7
8
9
10
FREQUENCY-KHZ

5.5.3 Analysis of Datasets 050457

COMMON CONDITIONS

Reference Microphone: Gulton Type MVA-2400, 1/4 inch, S/N 1011.
Reference Channel Gain: 101.6 (normalized frequency response function = $G_r(w)$).
Reference Microphone Sensitivity (measured by FIBG): 150.7 mv./PSI.
Unknown Microphone: Gulton Type MVA-2100, 5/8 inch, S/N 1003.
Unknown Channel Gain: 4.85 (Flat to within 1% to beyond 6 kHz.).
Unknown Microphone Sensitivity (measured by FIBG): 1.916 volts/PSI.
Transfer Function Equation:

$$H_u(w) = \frac{K_r(w)*H_r(w)}{K_u(w)} * \frac{O_u(w)}{O_r(w)}$$

Since $K_r(w) = 101.6*G_r(w)$, $H_r(w) = .1507$, and $K_u(w) = 4.85$, then

$$H_u(w) = 3.158\ G_r(w) * \frac{O_u(w)}{O_r(w)}$$

Approximate Peak Pressure: one impact each at 0.05, 0.1, 0.2, and 0.4 PSI.

SPECIFIC CONDITIONS APPLICABLE TO ONLY THE LISTED PLOT

050457-1
A COS taper window was applied to the Reference and to the Unknown time domain signals before taking the transforms. The plot shows the transfer function magnitude resulting from four different impact levels.

050457-2
Same as 050457-1 except that no window function was used.

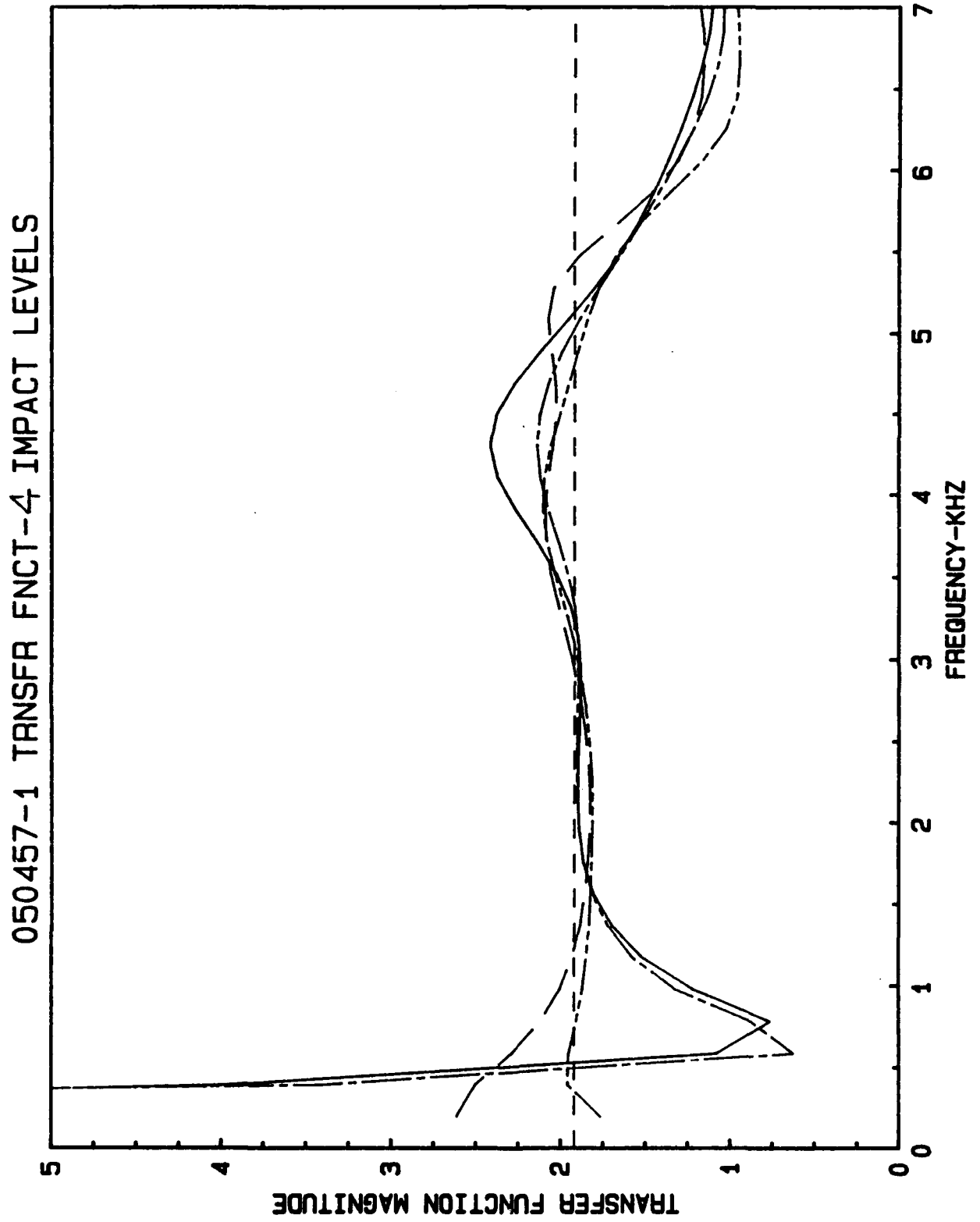
050457-1 TRNSFR FNCT-4 IMPACT LEVELS
TRANSFER FUNCTION MAGNITUDE
FREQUENCY-KHZ
0
1
2
3
4
5
6
7

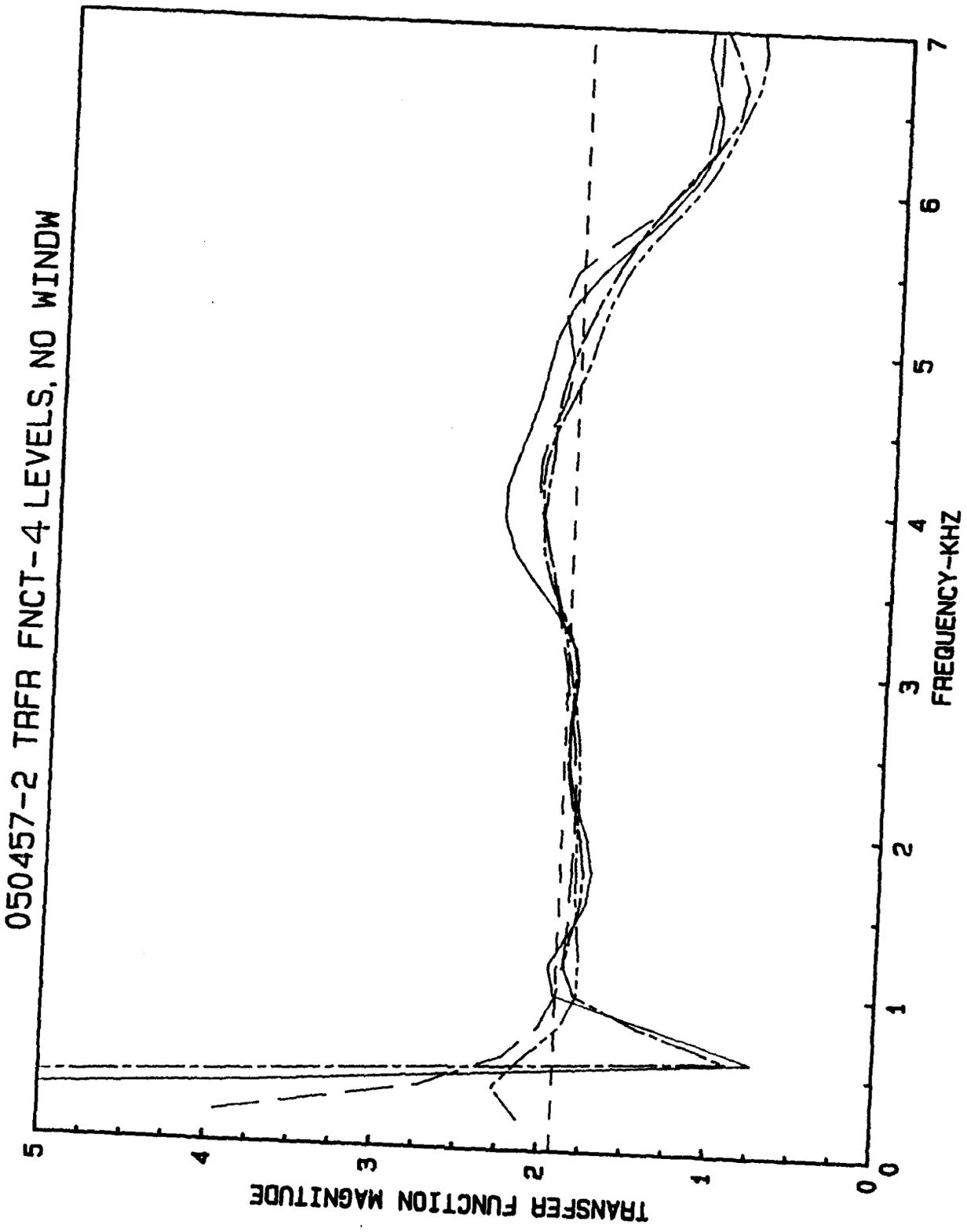
050457-2 TRFR FNCT-4 LEVELS, NO WINDW
TRANSFER FUNCTION MAGNITUDE
FREQUENCY-KHZ
0
1
2
3
4
5
6
7

6.0 Conclusions

Typical calibration results achieved with the Prototype Impulse Calibration Unit are illustrated by the data plots in Section 5.5 of this report. Only a few representative datasets are included. Considerably more data was acquired for analysis and is available on diskette for further analysis at any time. Datasets 05020951-4 and 05021004-1 show the measured response functions for two different "unknown" microphones. The same "reference" microphone was used in both cases. The plots show that the Impulse Calibration Unit provided a response function whose magnitude varied approximately +/-20% around the expected)FIBG calibration) value, over the frequency range of about 500 Hz. to about 4 kHz. The variance was greater below 500 Hz. and above 4 kHz. These plots also show that there was excellent repeatability for multiple impacts at approximately the same impact or pressure level.

Datasets 050457-1 and 050457-2 were generated from data acquired from a different combination of "reference" and "unknown" microphones as compared to those discussed in the last paragraph. These plots show the correlation of the transfer function magnitude among data from four different impact levels. Here as in previous cases, the measured response function magnitude was within +/- 20% of the expected value from about 1 kHz. to 4 kHz. However, the variance was less than 10% over the narrower frequency range from about 1.5 kHZ. to 3.5 kHz. at all four impact levels. Within this mid-range band, the variance among the four impact levels was small. This data was acquired at impact levels which resulted in peak cavity pressures of 0.05, 0.1, 0.2, and 0.4 PSI.

The fact that acceptable results were not obtained at the low and high frequency ends of the range of interest is probably due to the lower energy content in the pressure signal at these frequencies. Considerable effort was expended during the project attempting to improve the distribution of energy throughout the frequency range, however, these efforts were only partially successful.

It is apparent from the results described above that certain of the performance goals listed in Section 3 have not been achieved with the final design of the Prototype Impulse Calibration Unit. In particular, the accuracy/repeatability specification of +/-0.5 dB (or +/- 6%) was not achieved over the entire frequency range of interest, which was 10 Hz. to 5 kHz. The calibration results below about 1.5 kHz. and above 3.5 kHz. are seen to be unpredictable; however, the results in the mid-frequency range are close to the design goal. From this it can be concluded that a calibration device based on the Prototype Impulse Calibration Unit concept could be built which would have a high probability of meeting the

specified performance goals over a restricted frequency range. A portable device for field use could be developed that would consist of a small impact cylinder/piston on which the microphones would mount, and a laptop PC with a signal processing card occupying an I/O slot. The signal processing card would include two channel concurrent sampling at 100 kHz sampling rate, 16-bit conversion resolution, on-board anti-aliasing filters, and >90dB signal to noise ratio. Also, the board would also perform the FFT calculations in its own DSP chip. A commercial board is currently available with the required functionality; i.e. the DSP-56 card by Ariel Corp.,Highland Park, N.J.

The reliability of the response values calculated for the "unknown" microphones is dependent upon having accurate sensitivity and response data for the "reference" microphone. For most of the project, a PCB Model 112A22 quartz piezoelectric pressure transducer was used as the "reference" microphone. This device was supplied by the manufacturer with calibration data consisting of sensitivity data at five pressure levels from zero to 5 PSI. The sensitivity stated by PCB was 115.0 mV/psi. FIBG also checked this sensor and measured a sensitivity of 118 mV/psi, which is a difference of about 3% from the manufacturers data. The FIBG calibration value has been used for the data presented in this report. PCB does not supply specific frequency response data for the transducer, other than to state that over the frequency range of zero to 10 kHz it has a "flat" response. This should be true since the natural frequency of the transducer is 250 kHz, which is well above the frequencies of interest. The point to be made is that the frequency response of the "reference" transducer was assumed to be flat, and any deviation from a flat response is reflected in the results presented.

REFERENCES

(1) HEM Data Corporation, "SNAPSHOT Storage Scope Version 2.46-A, for Analog Devices, Inc. RTI 860 Boards", January 1988, 17025 Crescent Drive, Southfield,MI 48076

(2) DSP Development Corp., "The DADiSP Worksheet Signal Analysis Software", One Kendall Square, Cambridge, MA 02139

(3) Halvorsen, William G. and Brown, David L., "Impulse Technique for Structural Frequency Response Testing," Sound and Vibration, November 1977, pp. 8-21.

(4) Harris, Cyril M., "Shock and Vibration Handbook," Third Edition, McGraw-Hill Book Company, New York, New York, 1988, pp. 13-1 to 13-27, 20-4 to 20-7.

(5) Hewlett-Packard, "The Fundamentals of Signal Analysis," Application Note 243, November 1981.

APPENDIX A.

Prototype Impulse Calibration Unit Drawings

Drawing No.	Title
515SK2	IMPULSE CALIBRATION UNIT(HALF SIZE)
103263	PISTON
103264 (3 Sheets)	CYLINDER
103265	COVER PLATE
103266	SLEEVE
103267	PLATE
103268	PLATE
103269	BASE
103270	SPACER
103271	ARM
103272	CHUCK BODY
103273	CHUCK CORE
103274	IMPACT PLATE
103275	BASE
103276	NUT
103277	NUT
103278	BRACKET
103282	ASSEMBLY
103285	TRANSDUCER PLATE
515SK286	TRANSDUCER PLATE

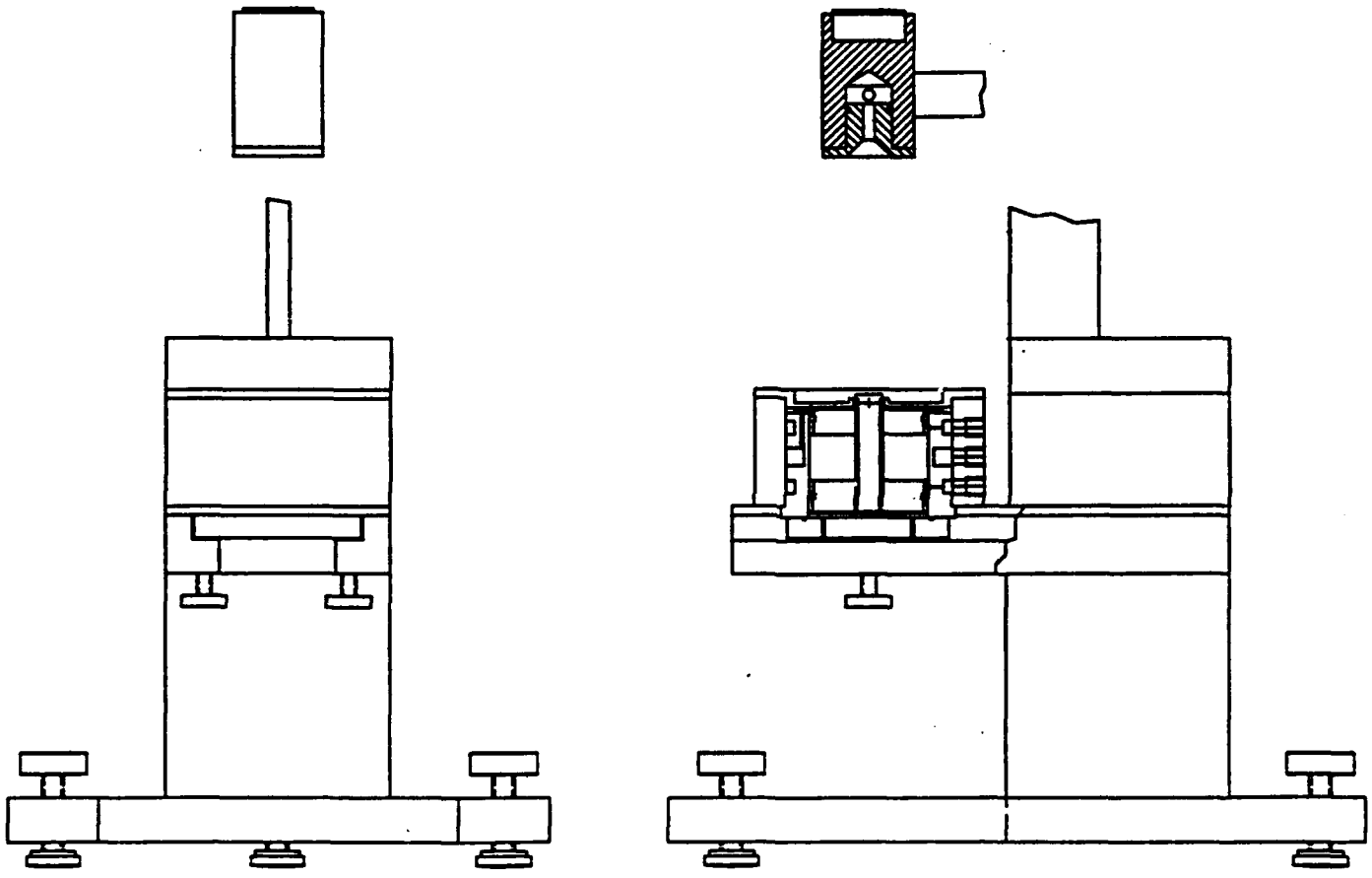

IMPULSE CALIBRATION UNIT

(HALF SIZE)

515SK2 SHT1 OF 1

REVISIONS			
LTR	DESCRIPTION	DATE	APPROVED
A	INITIAL RELEASE		

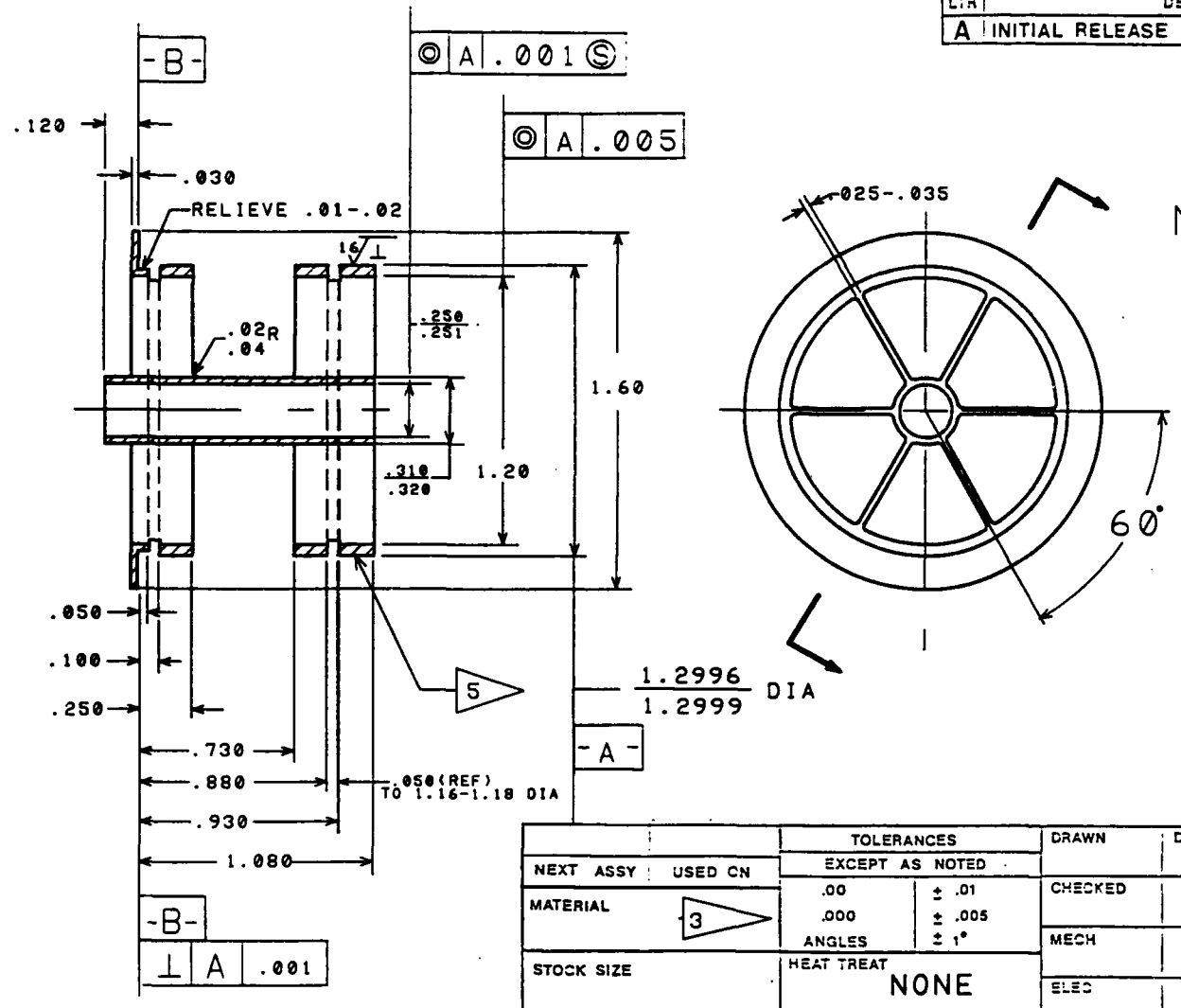

NOTES:

1 EXCEPT AS NOTED-INTERNAL RADII .01 MAX

2 BREAK CORNERS

3 MAG. AL. AZ80A-T5

4 IRIDITE OR EQUIV.

5 HARD ANODIZE DIA A

NEXT ASSY / USED ON	TOLERANCES EXCEPT AS NOTED		DRAWN / DATE
MATERIAL 3	.00	± .01	CHECKED
	.000	± .005	
	ANGLES	± 1°	MECH
STOCK SIZE	HEAT TREAT NONE		ELEC
PROJECT NO. 515	FINISH 4		PROJ

PISTON-IMPULSE CALIBRATION UNIT

SIZE B | 103263 | REV. A

SCALE 2X SIZE SHEET OF 1

263S1A

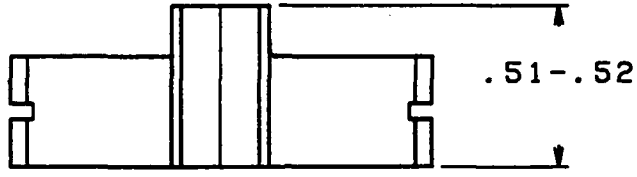

PISTON MOD

(2X SIZE)

SHT 1 OF 1

A-4

REVISIONS			
LTR	DESCRIPTION	DATE	APPROVED
A	INITIAL RELEASE		

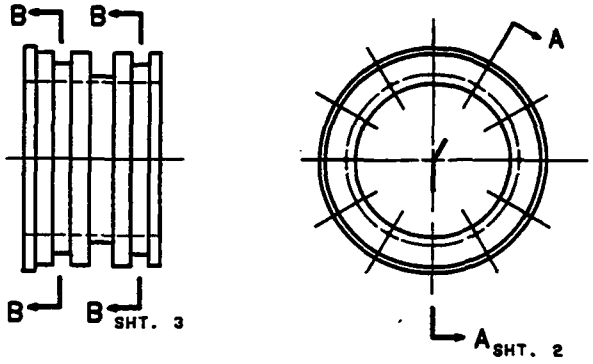

NOTES:

1. INTERNAL RADII .01 MAX
2. BREAK CORNERS .005 MAX
3. HARD ANODIZE BORE -A- AND SURFACE -B-

103264 CYLINDER
(FULL SIZE)

NEXT ASSY / USED ON	TOLERANCES EXCEPT AS NOTED	DRAWN / DATE	
MATERIAL MAG AL. AZ80A-T5	.00 ± .01; .000 ± .005; ANGLES ± 1°	CHECKED	
STOCK SIZE	HEAT TREAT NONE	MECH	CYLINDER-IMPULSE CALIBRATION UNIT
PROJECT NO. 515	FINISH IRIDITE OR EQUIV.	ELEC / PROJ	SIZE B 103264 REV. A
			SCALE NOTED SHEET 1 OF 3

264S1A

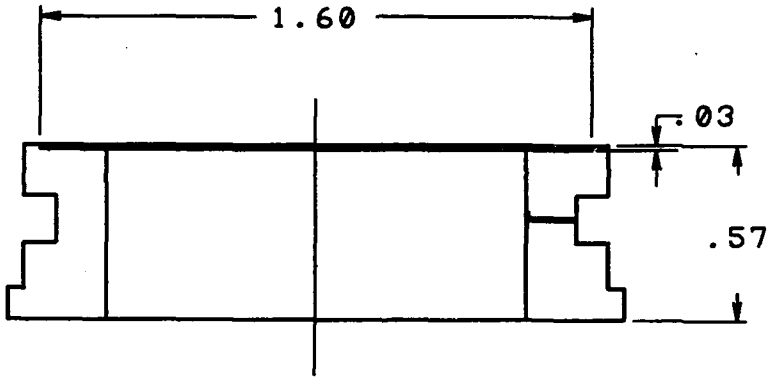

CYLINDER MOD

(2 X SIZE)

SHT 1 OF 3

A-6

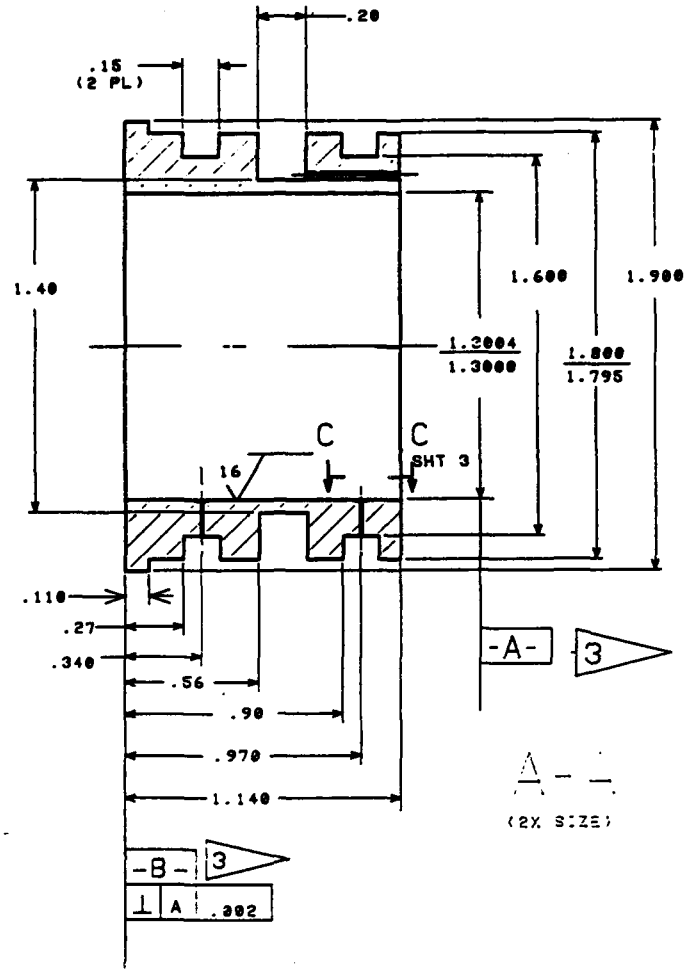

A – –

(2X SIZE)

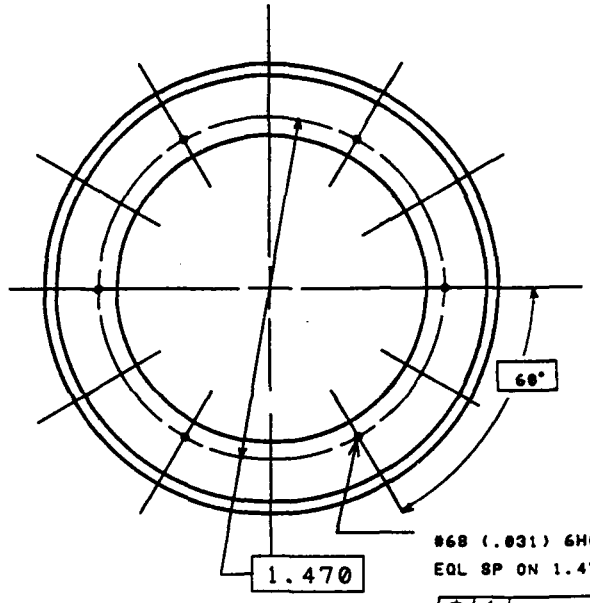

A-7

264S2A

B103264 SHT 2 OF 3

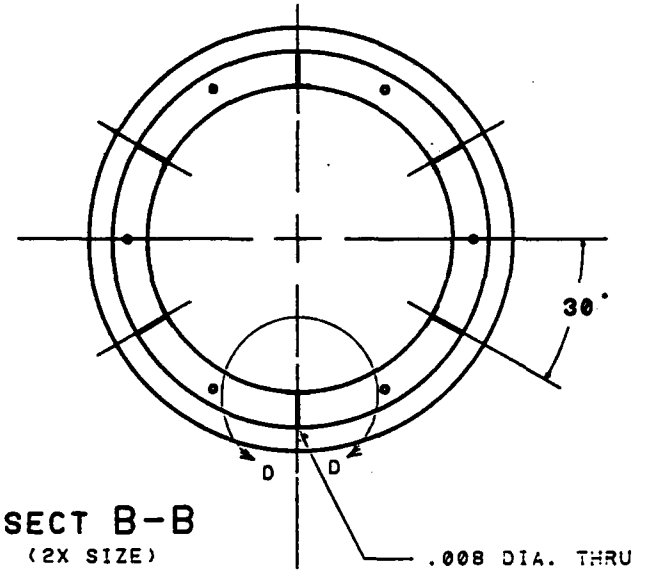

SECT B-B
(2X SIZE)

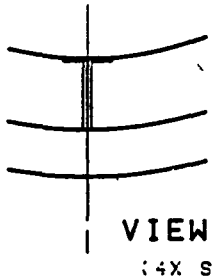

VIEW D-D
(4X SIZE)

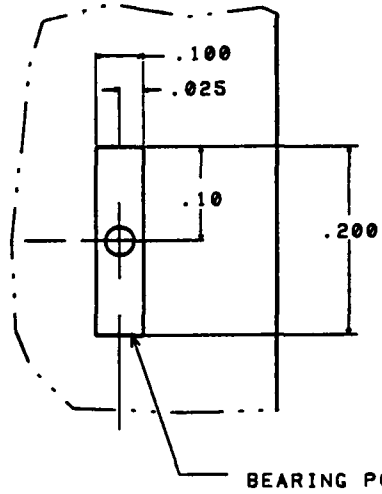

VIEW C-C SHT. 2
(8X SIZE)

A-8

264S3A

B103264 SHT 3 OF 3

REVISIONS			
LTR	DESCRIPTION	DATE	APPROVED
A	INITIAL RELEASE		

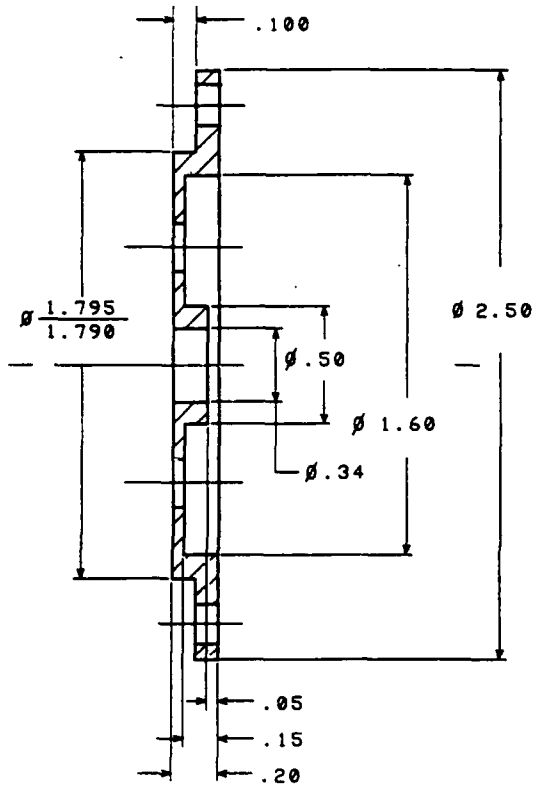

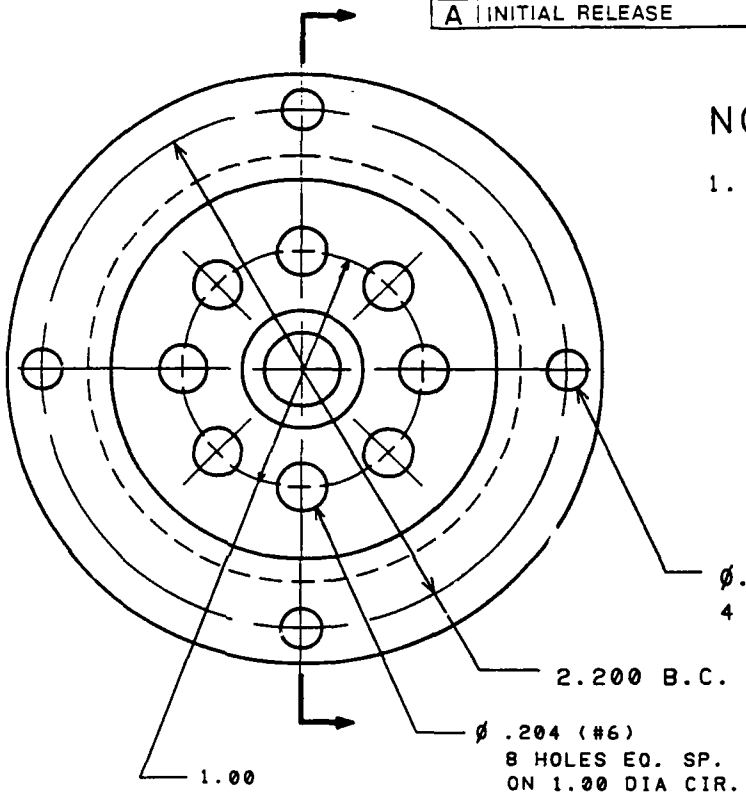

NOTES:

1. INTERNAL RADII .005 MAX

   BREAK CORNERS .005 MAX

NEXT ASSY / USED ON	TOLERANCES EXCEPT AS NOTED		DRAWN / DATE	
MATERIAL MAG AL. AZ31B	.00 ± .01 .000 ± .005 ANGLES ± 1°		CHECKED	COVER PLATE-IMPULSE CALIBRATION UNIT
STOCK SIZE	HEAT TREAT NONE		MECH	
PROJECT NO. 515	FINISH IRIDITE OR EQUIV.		ELEC / PROJ	SIZE B 103265 REV. A
				SCALE 2X SIZE SHEET 1 OF 1

265S1

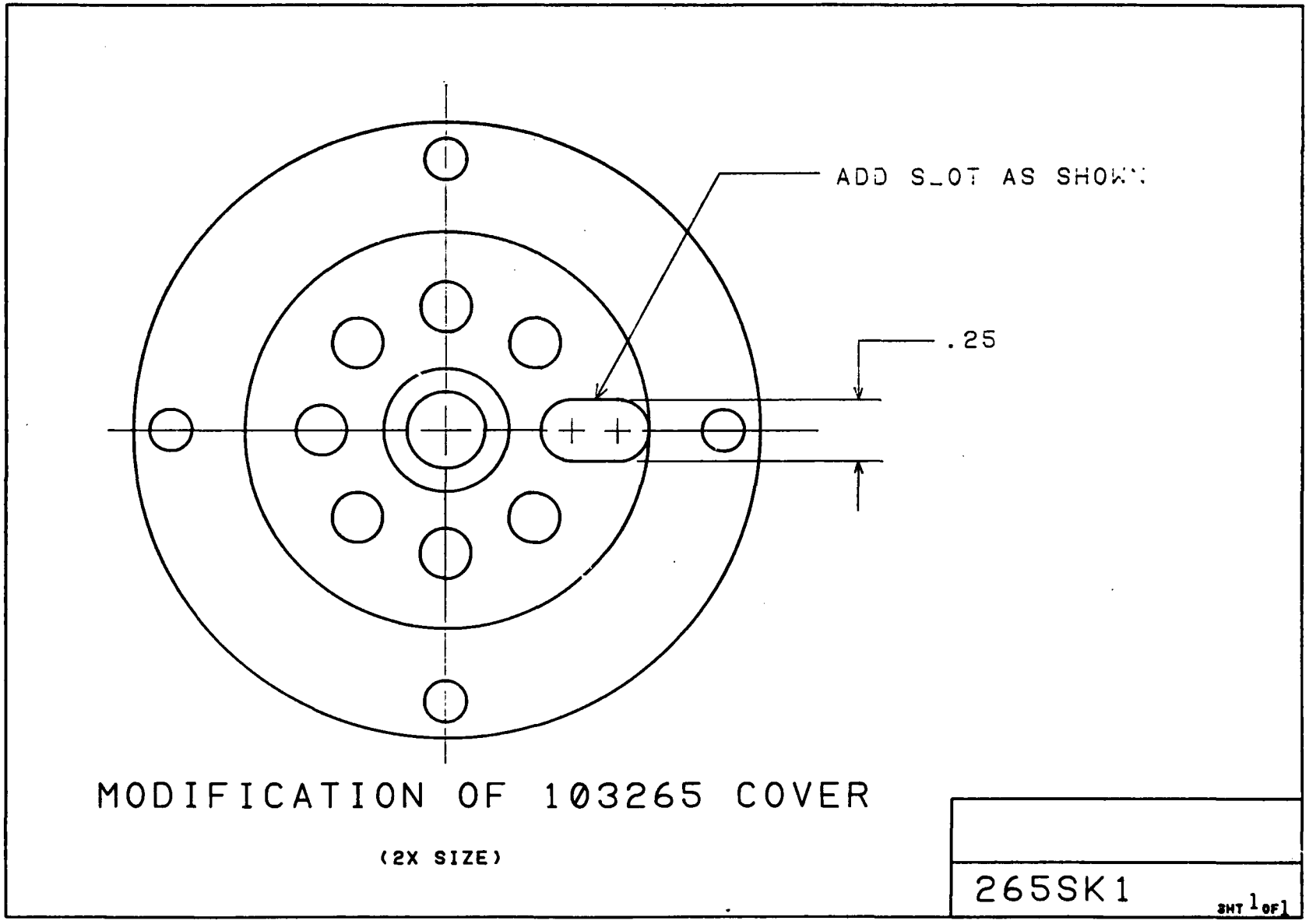

MODIFICATION OF 103265 COVER

(2X SIZE)

265SK1

SHT 1 OF 1

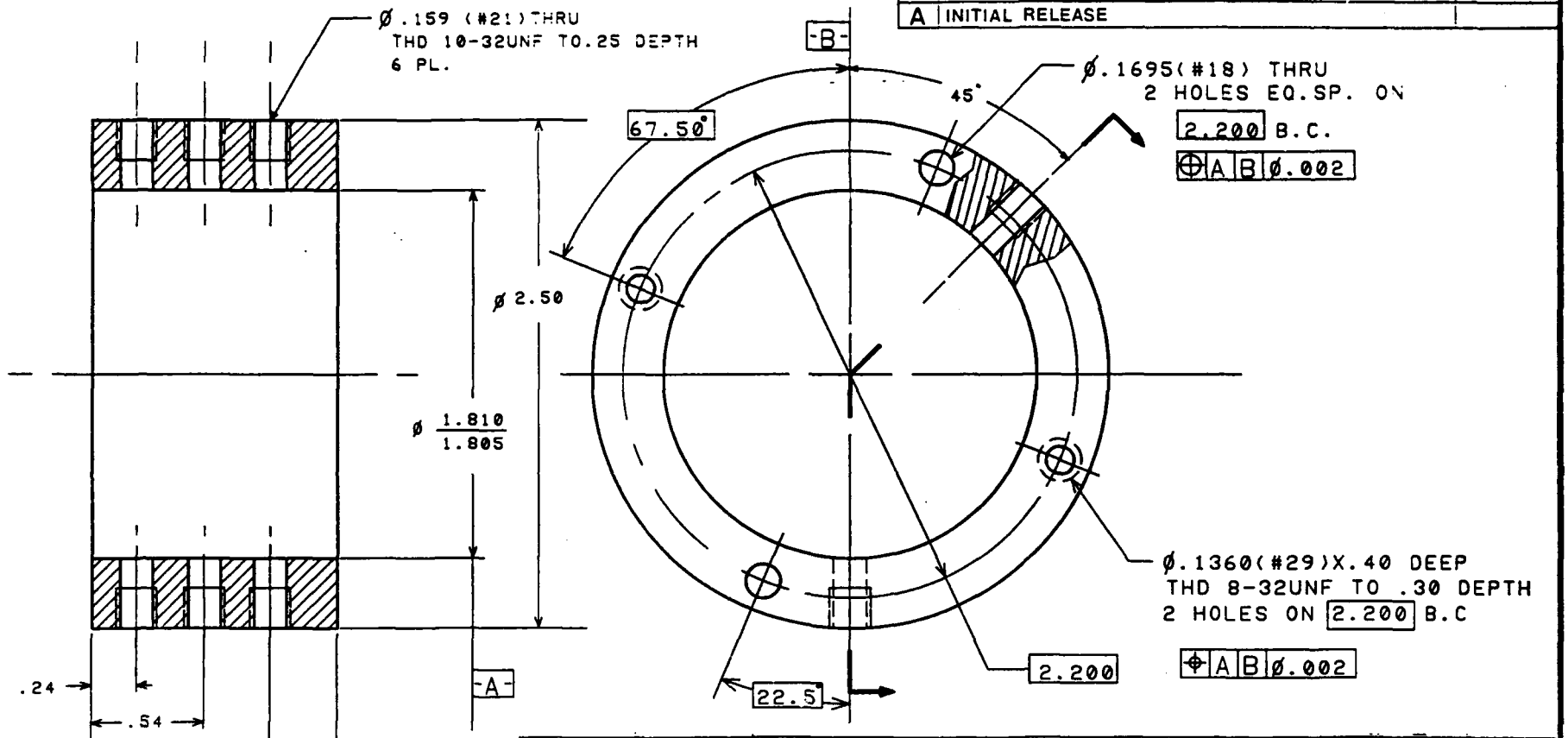

REVISIONS			
LTR	DESCRIPTION	DATE	APPROVED
A	INITIAL RELEASE		

NEXT ASSY USED ON	TOLERANCES EXCEPT AS NOTED	DRAWN	DATE
MATERIAL MAG ALL AZ31B	.00 ± .01; .000 ± .005; ANGLES ± 1°	CHECKED	
STOCK SIZE	HEAT TREAT NONE	MECH	
PROJECT NO. 515	FINISH IRIDITE OR EQUIV.	ELEC	
266S1		PROJ	

SLEEVE-IMPULSE CALIBRATION UNIT

SIZE B | 103266 | REV. A

SCALE 2X SIZE SHEET 1 OF 1

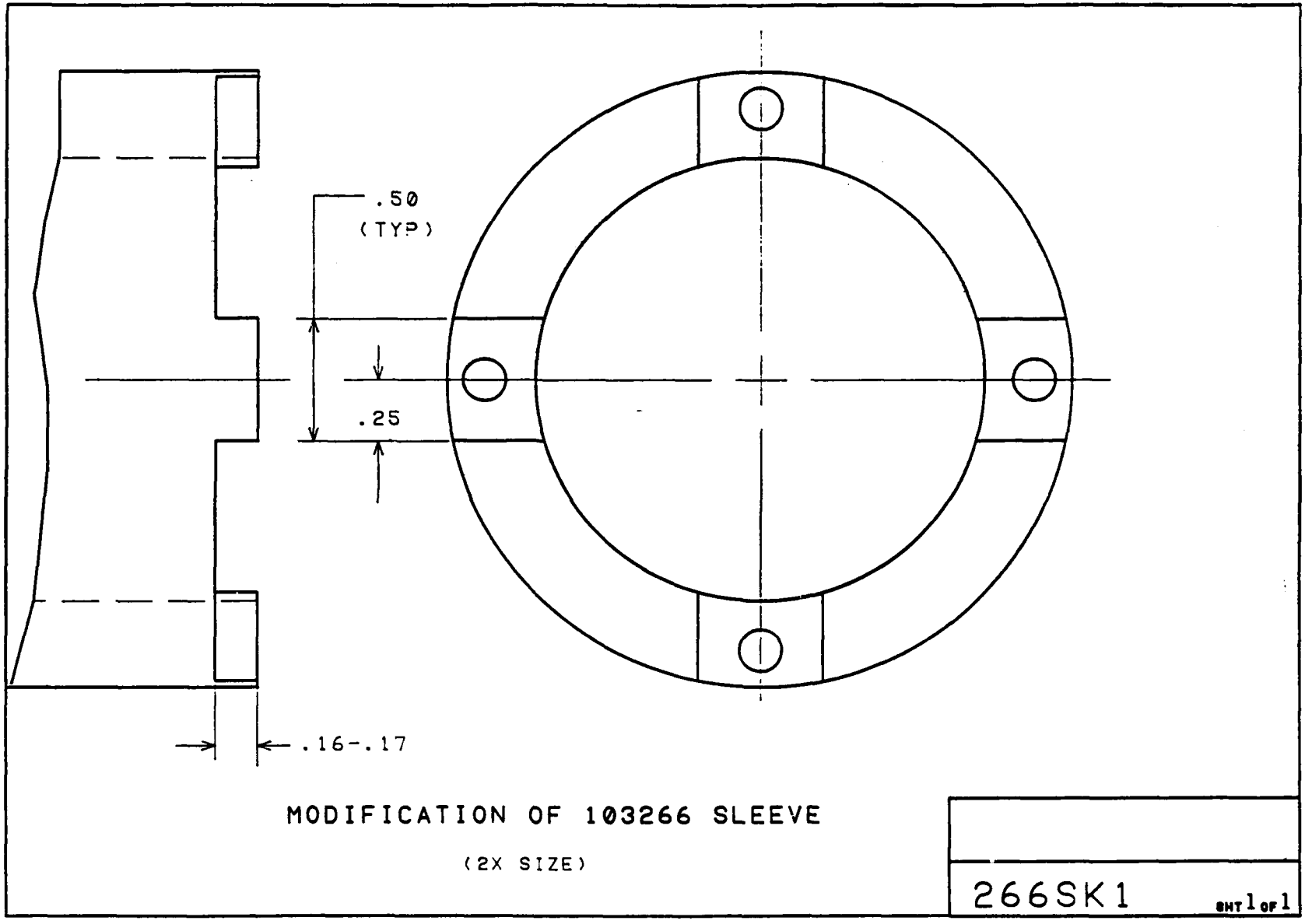

MODIFICATION OF 103266 SLEEVE

(2X SIZE)

266SK1 SHT 1 OF 1

REVISIONS			
LTR	DESCRIPTION	DATE	APPROVED
A	INITIAL RELEASE		

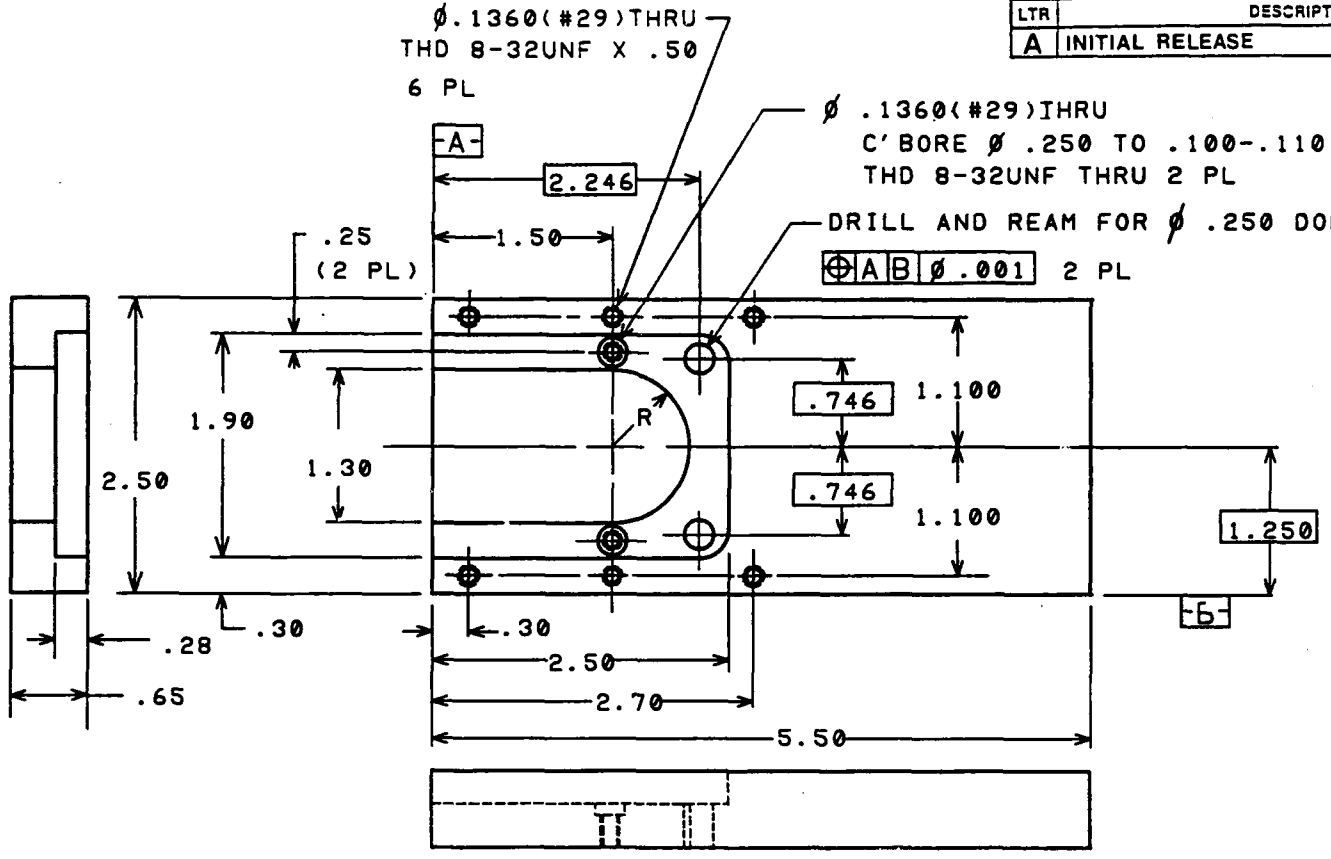

NOTES:

1. CRS FLAT GRADE OPTIONAL
2. EXCEPT AS NOTED INTERNAL RADII .01 MAX

NEXT ASSY / USED ON	TOLERANCES EXCEPT AS NOTED		DRAWN / DATE	
MATERIAL 1	.00	± .01	CHECKED	PLATE-IMPULSE CALIBRATION UNIT
	.000	± .005		
	ANGLES	± 1°	MECH	
STOCK SIZE	HEAT TREAT: NONE		ELEC	SIZE B 103267 REV. A
PROJECT NO. 515	FINISH: NONE		PROJ	SCALE FUL SIZE SHEET 1 OF 1

267S1

REVISIONS			
LTR	DESCRIPTION	DATE	APPROVED
A	INITIAL RELEASE		

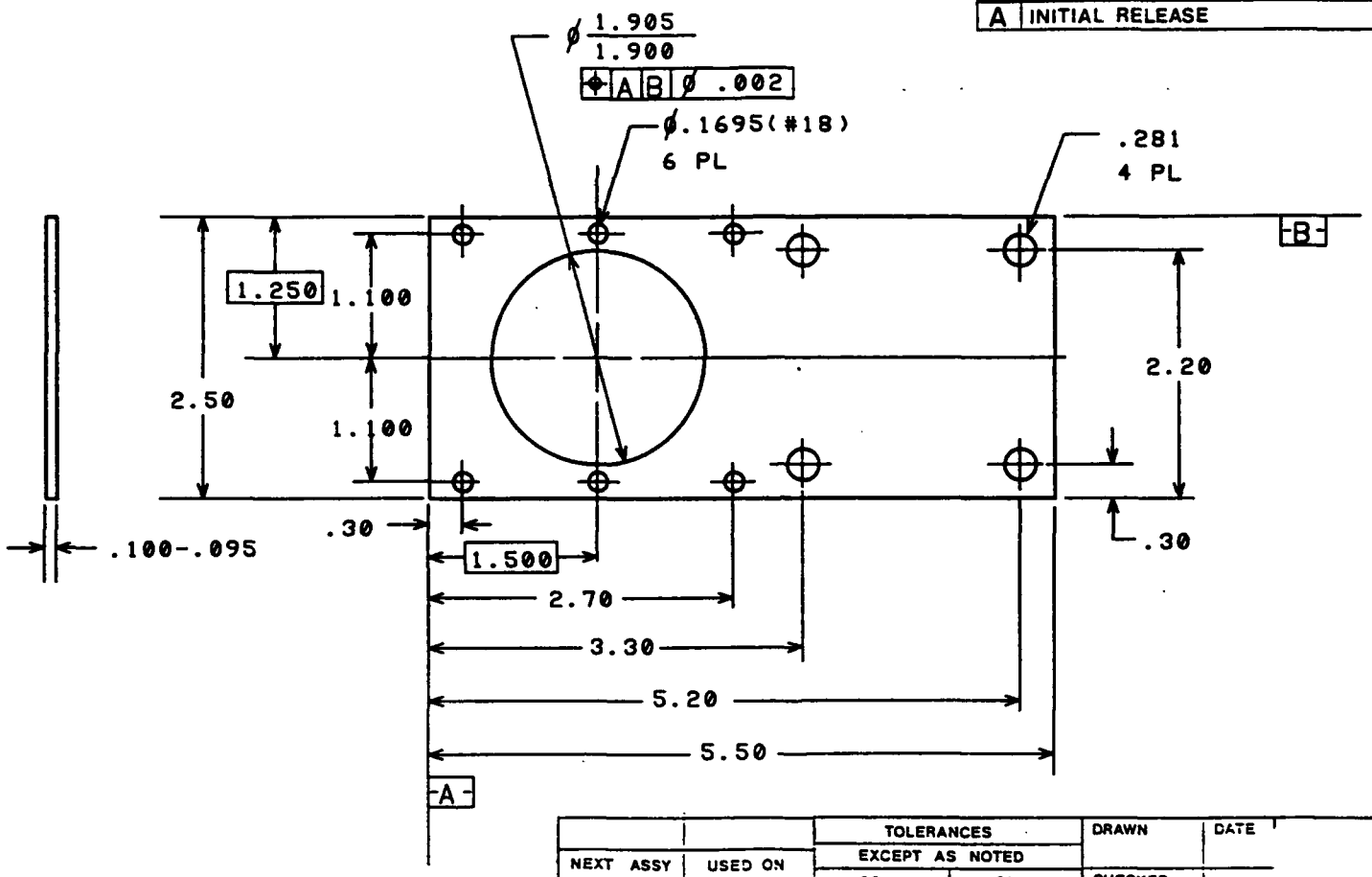

		TOLERANCES		DRAWN	DATE
NEXT ASSY	USED ON	EXCEPT AS NOTED			
MATERIAL CRS FLAT GRADE OPTIONAL		.00	± .01	CHECKED	
		.000	± .005		
		ANGLES	± 1°	MECH	
STOCK SIZE		HEAT TREAT NONE		ELEC	
PROJECT NO. 515		FINISH CLEAR ANODIZE		PROJ	

PLATE-IMPULSE CALIBRATION UNIT

SIZE B | 103268 | REV. A

SCALE FULL SIZE SHEET 1 OF 1

268S1

REVISIONS			
LTR	DESCRIPTION	DATE	APPROVED
A	INITIAL RELEASE		

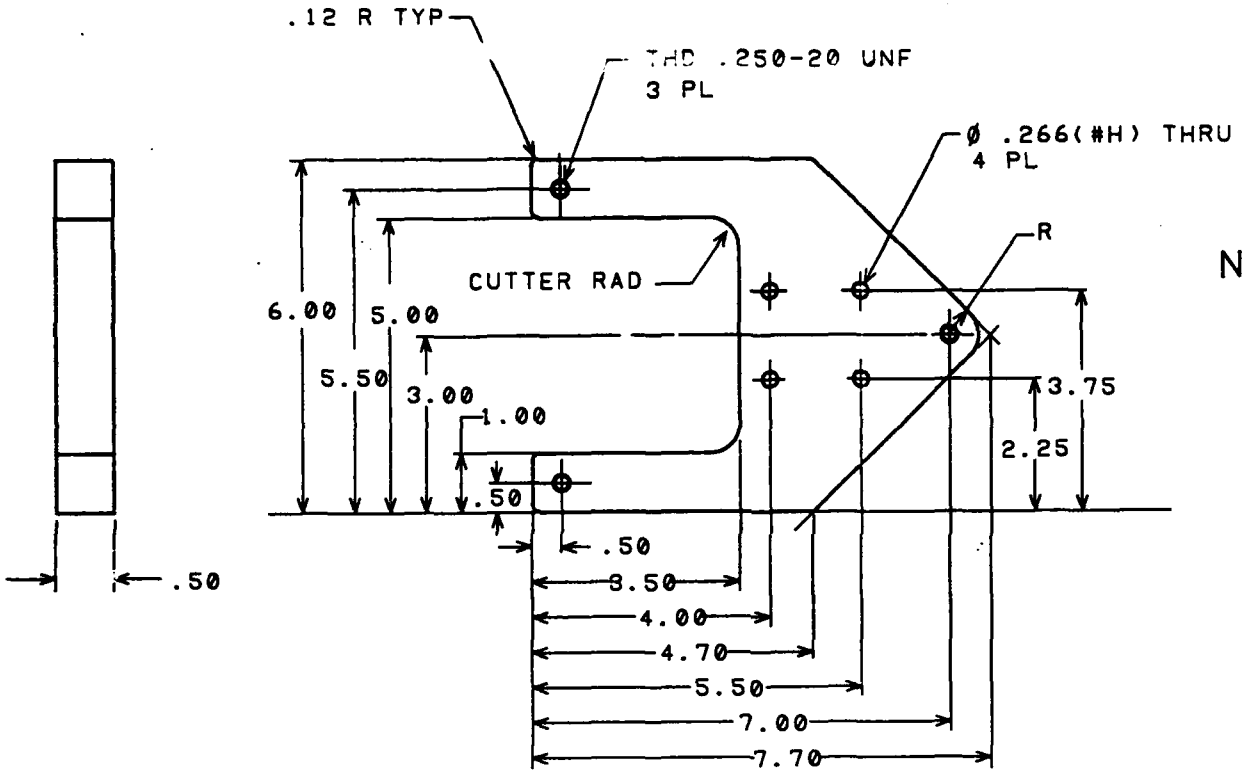

NOTES:

1. CHAMFER EDGES .03-.05X45°
2. CRS FLAT GRADE OPTIONAL

		TOLERANCES		DRAWN	DATE
NEXT ASSY	USED ON	EXCEPT AS NOTED			
MATERIAL 2		.00	± .01	CHECKED	
		.000	± .005		
		ANGLES	± 1°	MECH	
STOCK SIZE		HEAT TREAT			
6X.5X8L		NONE		ELEC	
PROJECT NO.		FINISH			
515		NONE		PROJ	

BASE-IMPULSE CALIBRATION UNIT

SIZE B | 103269 | REV. A

SCALE HALF SIZE SHEET 1 OF 1

269S1

A-15

REVISIONS			
LTR	DESCRIPTION	DATE	APPROVED
A	INITIAL RELEASE		

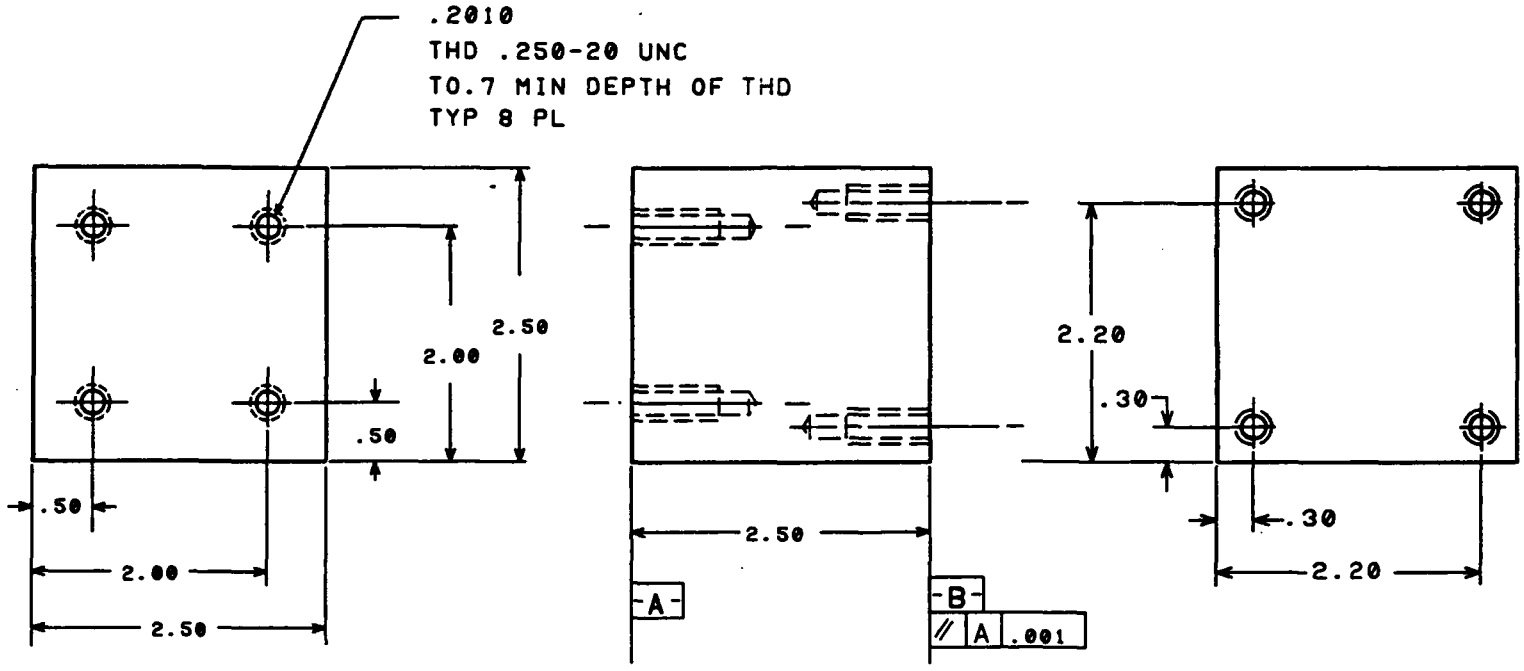

A-16

270S1

NEXT ASSY / USED ON		TOLERANCES EXCEPT AS NOTED		DRAWN / DATE	
MATERIAL	C.R.S. BAR	.00	± .01	CHECKED	
		.000	± .005		
		ANGLES	± 1°	MECH	
STOCK SIZE		HEAT TREAT	NONE	ELEC	
PROJECT NO.	515	FINISH	NONE	PROJ	

SPACER-IMPULSE CALIBRATION UNIT

SIZE B | 103270 | REV. A

SCALE FULL SIZE | SHEET 1 OF 1

REVISIONS			
LTR	DESCRIPTION	DATE	APPROVED
A	INITIAL RELEASE		

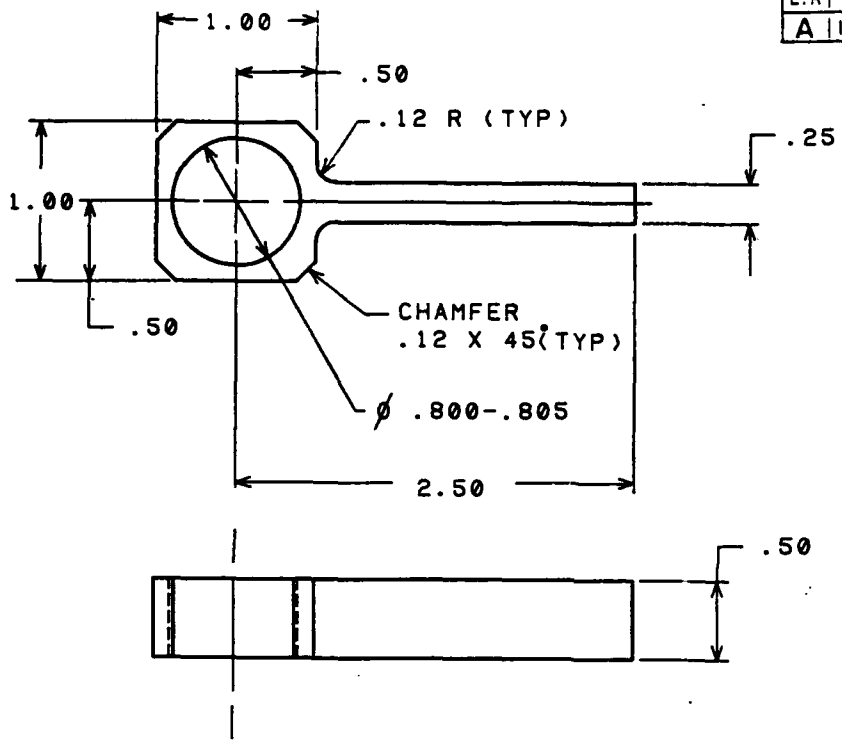

NOTES:

1. [1] AL. ALLOY FLAT 2024-T4
2. BREAK EDGES .01-.02 X 45°

NEXT ASSY / USED ON		TOLERANCES EXCEPT AS NOTED		DRAWN	DATE
MATERIAL [1]		.00	± .01	CHECKED	
		.000	± .005		
		ANGLES	± 1°	MECH	
STOCK SIZE		HEAT TREAT: NONE		ELEC	
PROJECT NO. 515		FINISH: CLEAR ANODIZE		PROJ	

ARM-IMPULSE CALIBRATION UNIT

SIZE B | 103271 | REV. A

SCALE FULL SIZE | SHEET 1 OF 1

271S1

A-17

REVISIONS			
LTR	DESCRIPTION	DATE	APPROVED
A	INITIAL RELEASE		

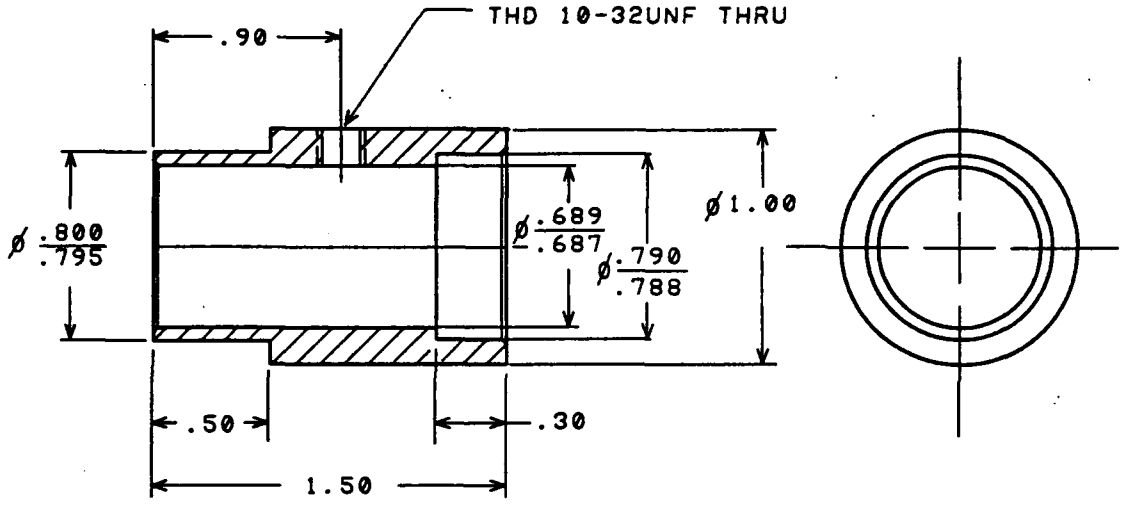

NOTES:

1. INTERNAL RADII .01 MAX
2. BREAK EDGES .01-.02 X 45°

3 AL. ALLOY 2024-T4

NEXT ASSY / USED ON	TOLERANCES EXCEPT AS NOTED	DRAWN / DATE	
MATERIAL 3	.00 ± .01; .000 ± .005; ANGLES ± 1°	CHECKED	CHUCK BODY-IMPULSE CALIBRATION UNIT
STOCK SIZE	HEAT TREAT: NONE	MECH	
PROJECT NO. 515	FINISH: CLEAR ANODIZE	ELEC / PROJ	SIZE B | 103272 | REV. A
			SCALE 2X SIZE SHEET 1 OF 1

272S1

REVISIONS			
LTR	DESCRIPTION	DATE	APPROVED
A	INITIAL RELEASE		

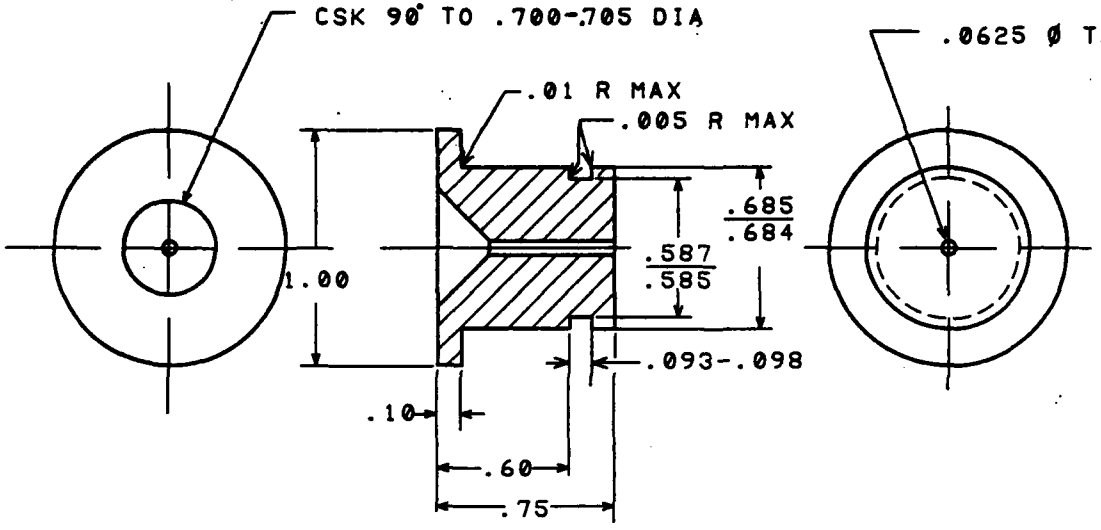

NOTES:

1. EXCEPT AS NOTED-CHAMFER EDGES .02-.03X45°

NEXT ASSY. USED ON	TOLERANCES EXCEPT AS NOTED	DRAWN / DATE	
MATERIAL: DELRIN ROD	.00 ± .01; .000 ± .005; ANGLES ± 1°	CHECKED	CHUCK CORE-IMPULSE CALIBRATION UNIT
STOCK SIZE: 1ØX1L	HEAT TREAT: NONE	MECH	SIZE B 103273 REV. A
PROJECT NO.: 515	FINISH: NONE	ELEC / PROJ	SCALE 2X SIZE SHEET 1 OF 1

273S1

REVISIONS			
LTR	DESCRIPTION	DATE	APPROVED
A	INITIAL RELEASE		

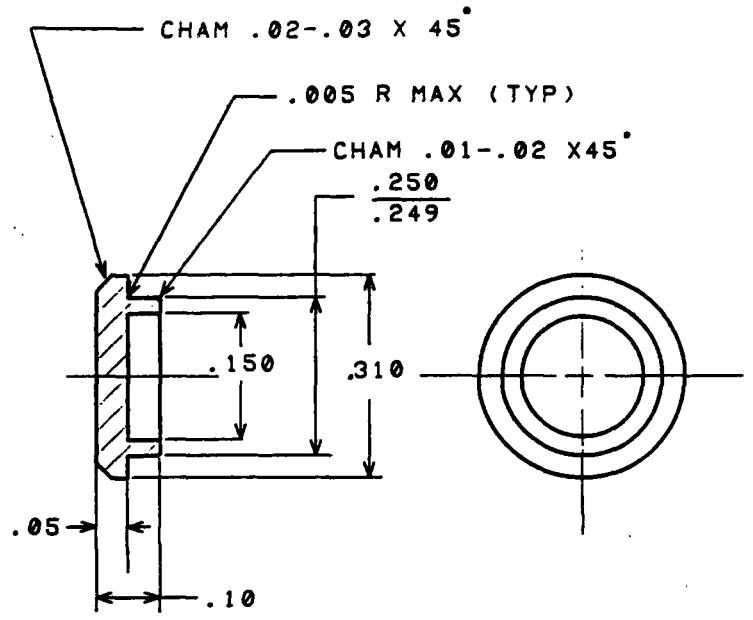

NOTES:

1. TOOL STEEL-AISI 01
2. RC 50-55

NEXT ASSY | USED ON	TOLERANCES EXCEPT AS NOTED		DRAWN	DATE
MATERIAL 1	.00	± .01	CHECKED	
	.000	± .005		
	ANGLES	± 1°	MECH	
STOCK SIZE	HEAT TREAT 2		ELEC	
PROJECT NO. 515	FINISH NONE		PROJ	

IMPACT PLATE-IMPULSE CALIBRATION UNIT

SIZE A 103274 REV. A

SCALE 4:1 SHEET 1 OF 1

274S1

REVISIONS			
LTR	DESCRIPTION	DATE	APPROVED
A	INITIAL RELEASE		

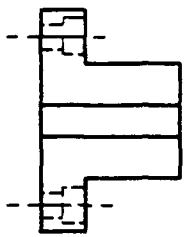

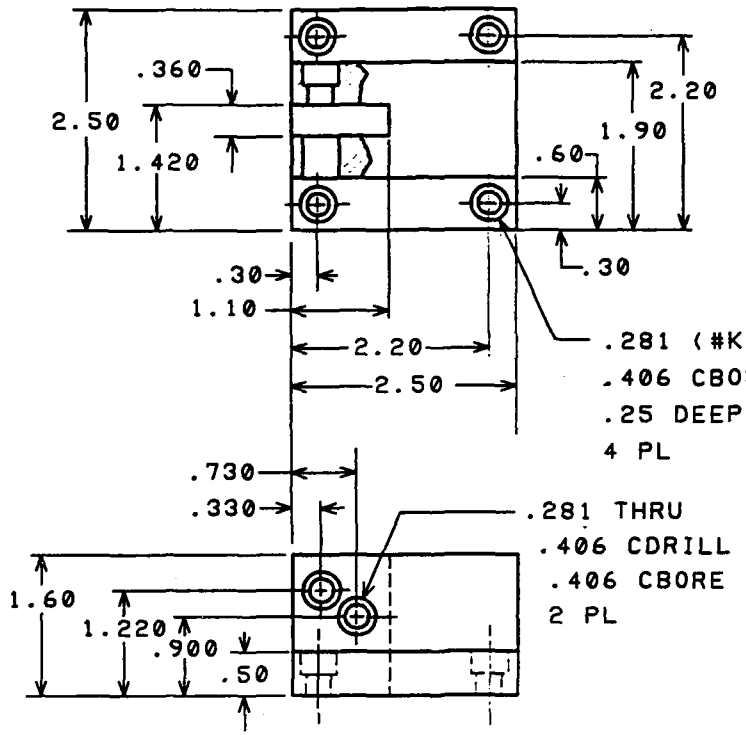

.281 (#K) THRU
.406 CBORE
.25 DEEP
4 PL

.281 THRU
.406 CDRILL NEAR SIDE
.406 CBORE .25 DEEP FAR SIDE
2 PL

NOTES:

1. CHAMFER EDGES .02-.03 X 45°

2 C.R.S.-GRADE OPTIONAL

A-21

275S1

NEXT ASSY / USED ON		TOLERANCES EXCEPT AS NOTED		DRAWN / DATE	
MATERIAL	2	.00	± .01	CHECKED	BASE-IMPULSE CALIBRATION UNIT
		.000	± .005		
		ANGLES	± 1°	MECH	
STOCK SIZE		HEAT TREAT: NONE		ELEC	SIZE B / 103275 / REV. A
PROJECT NO. 515		FINISH: BLACK OXIDE		PROJ	SCALE .75:1 / SHEET 1 OF 1

REVISIONS			
LTR	DESCRIPTION	DATE	APPROVED
A	INITIAL RELEASE		

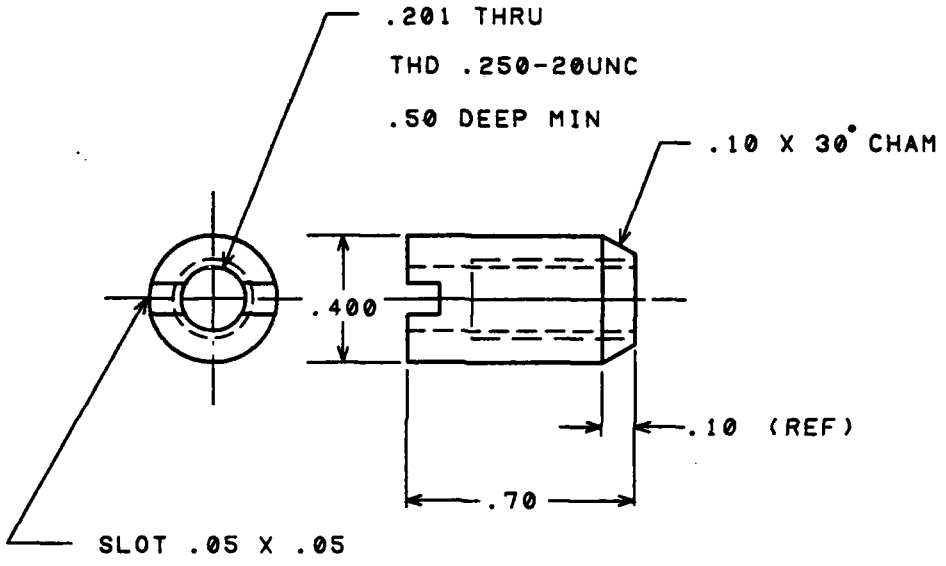

		TOLERANCES		DRAWN	DATE
NEXT ASSY	USED ON	EXCEPT AS NOTED			
MATERIAL		.00	± .01	CHECKED	
DRILL ROD		.000	± .005		
		ANGLES	± 1°	MECH	
STOCK SIZE		HEAT TREAT		ELEC	
		NONE			
PROJECT NO.		FINISH		PROJ	
515		NONE			

NUT-IMPULSE CALIBRATION UNIT

SIZE		REV.
B	103276	A

SCALE 2:1 SHEET 1 OF 1

276S1

REVISIONS			
LTR	DESCRIPTION	DATE	APPROVED
A	INITIAL RELEASE		

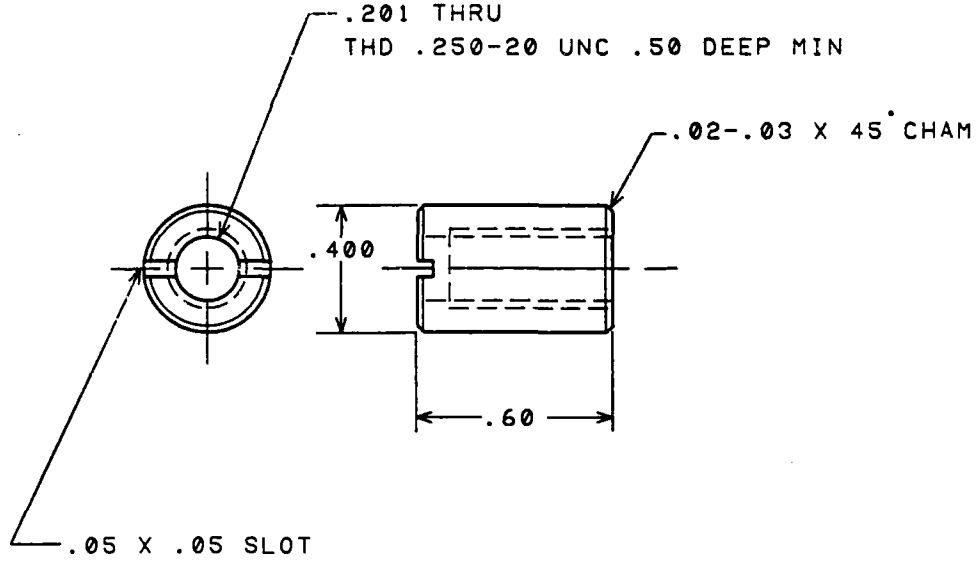

NEXT ASSY | USED ON	TOLERANCES EXCEPT AS NOTED	DRAWN | DATE	
MATERIAL DRILL ROD	.00 ± .01 .000 ± .005 ANGLES ± 1°	CHECKED	NUT-IMPULSE CALIBRATION UNIT
STOCK SIZE	HEAT TREAT NONE	MECH	
PROJECT NO 515	FINISH NONE	ELEC	SIZE B | 103277 | REV. A
277S1		PROJ	SCALE 2:1 SHEET 1 OF 1

REVISIONS			
LTR	DESCRIPTION	DATE	APPROVED
A	INITIAL RELEASE		

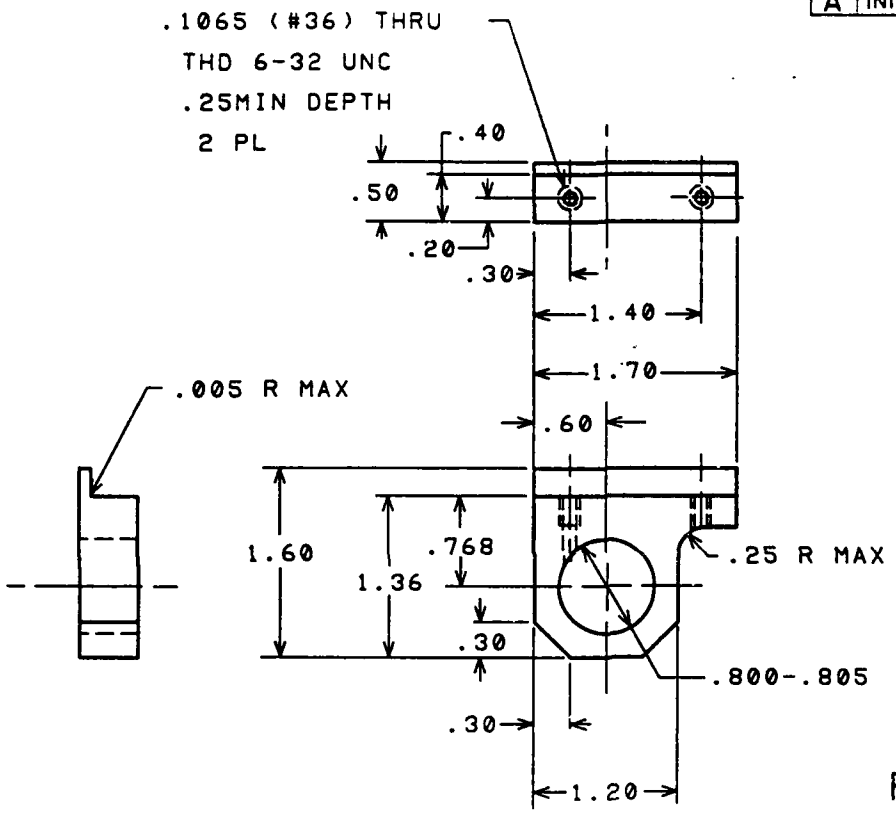

NOTES :

1. AL. ALLOY 2024-T4
2. BREAK EDGES .02 MAX

REPLACES B103271

NEXT ASSY USED ON	TOLERANCES EXCEPT AS NOTED		DRAWN	DATE
MATERIAL 1	.00 ± .01 .000 ± .005 ANGLES ± 1°		CHECKED	
STOCK SIZE	HEAT TREAT NONE		MECH	
PROJECT NO. 515	FINISH CLEAR ANODIZE		ELEC	
			PROJ	

BRACKET-IMPULSE CALIBRATION UNIT

SIZE B | 103278 | REV. A

SCALE FULL SIZE SHEET 1 OF 1

278S1

A-24

REVISIONS			
LTR	DESCRIPTION	DATE	APPROVED
A	INITIAL RELEASE		

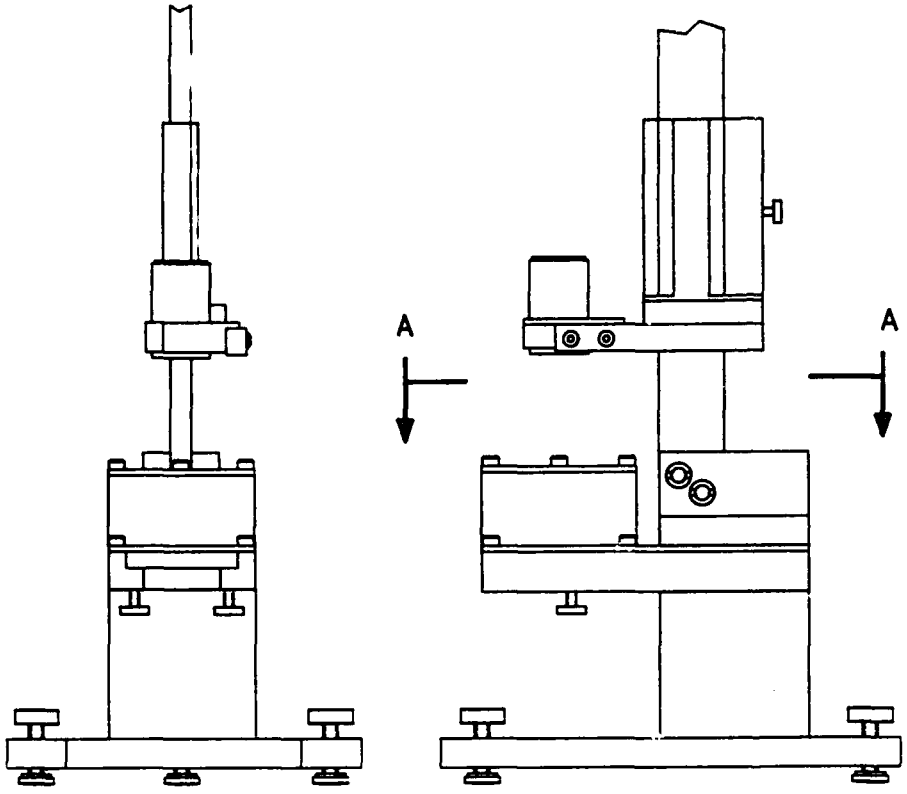

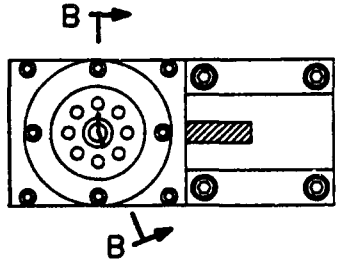

A-A

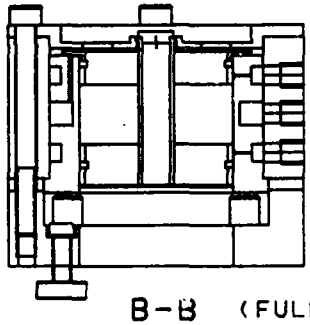

B-B (FULL SIZE-ROT 90°)

		TOLERANCES		DRAWN	DATE
NEXT ASSY	USED ON	EXCEPT AS NOTED			
		.00	± .01	CHECKED	
MATERIAL		.000	± .005		
		ANGLES	± 1°	MECH	
STOCK SIZE		HEAT TREAT		ELEC	
PROJECT NO. 515		FINISH		PROJ	

ASSEMBLY-IMPULSE CALIBRATION UNIT

SIZE B | 103282 | REV. A

SCALE HALF SIZE SHEET 1 OF 2

REVISIONS			
LTR	DESCRIPTION	DATE	APPROVED
A	INITIAL RELEASE		

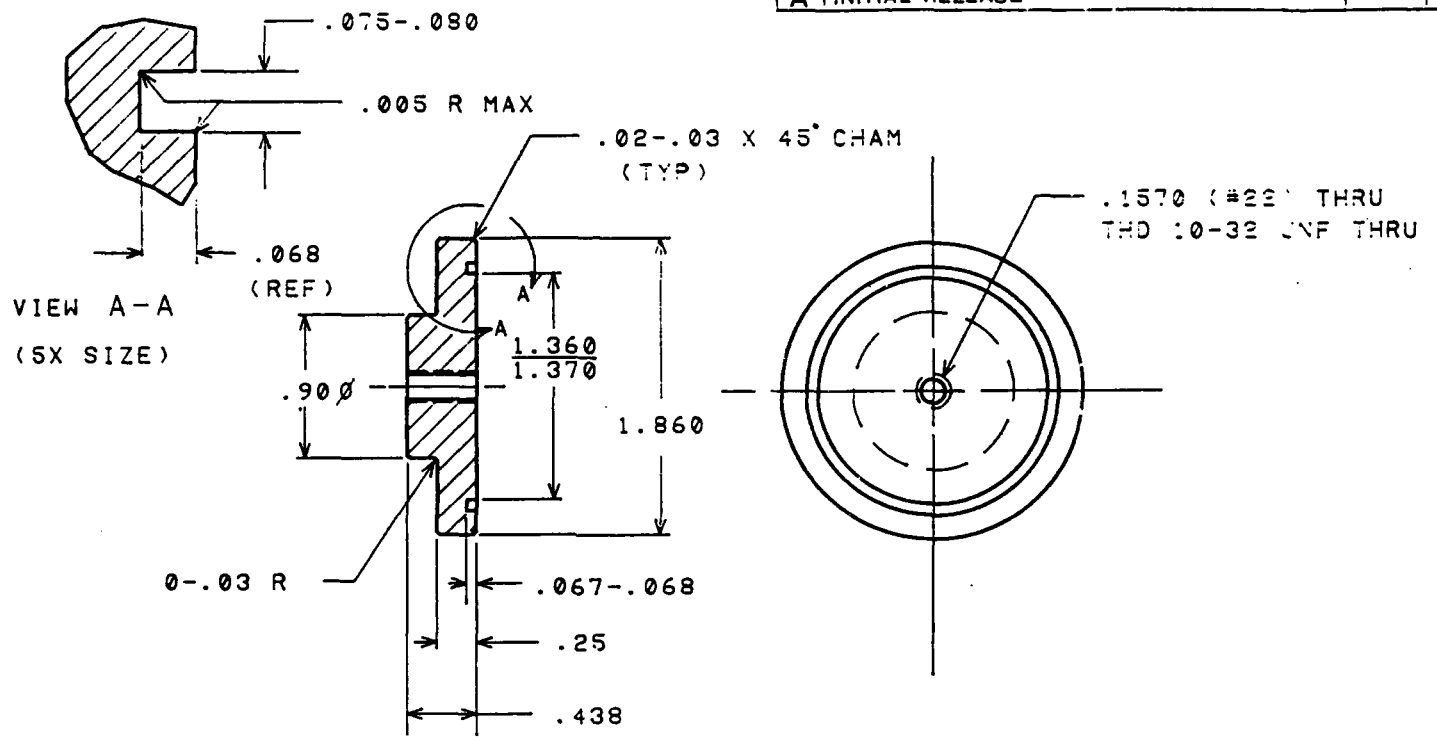

	TOLERANCES	DRAWN	DATE
NEXT ASSY | USED ON	EXCEPT AS NOTED		
MATERIAL 2024-T4 AL.	.00 ± .01 .000 ± .005 ANGLES ± 1°	CHECKED	
		MECH	
STOCK SIZE	HEAT TREAT NONE	ELEC	
PROJECT NO. 515	FINISH NONE	PROJ	

TRANSDUCER PLATE
IMPULSE CALIBRATION UNIT

SIZE A 103285 REV. A

SCALE FULL SIZE SHEET 1 OF 1

285S1

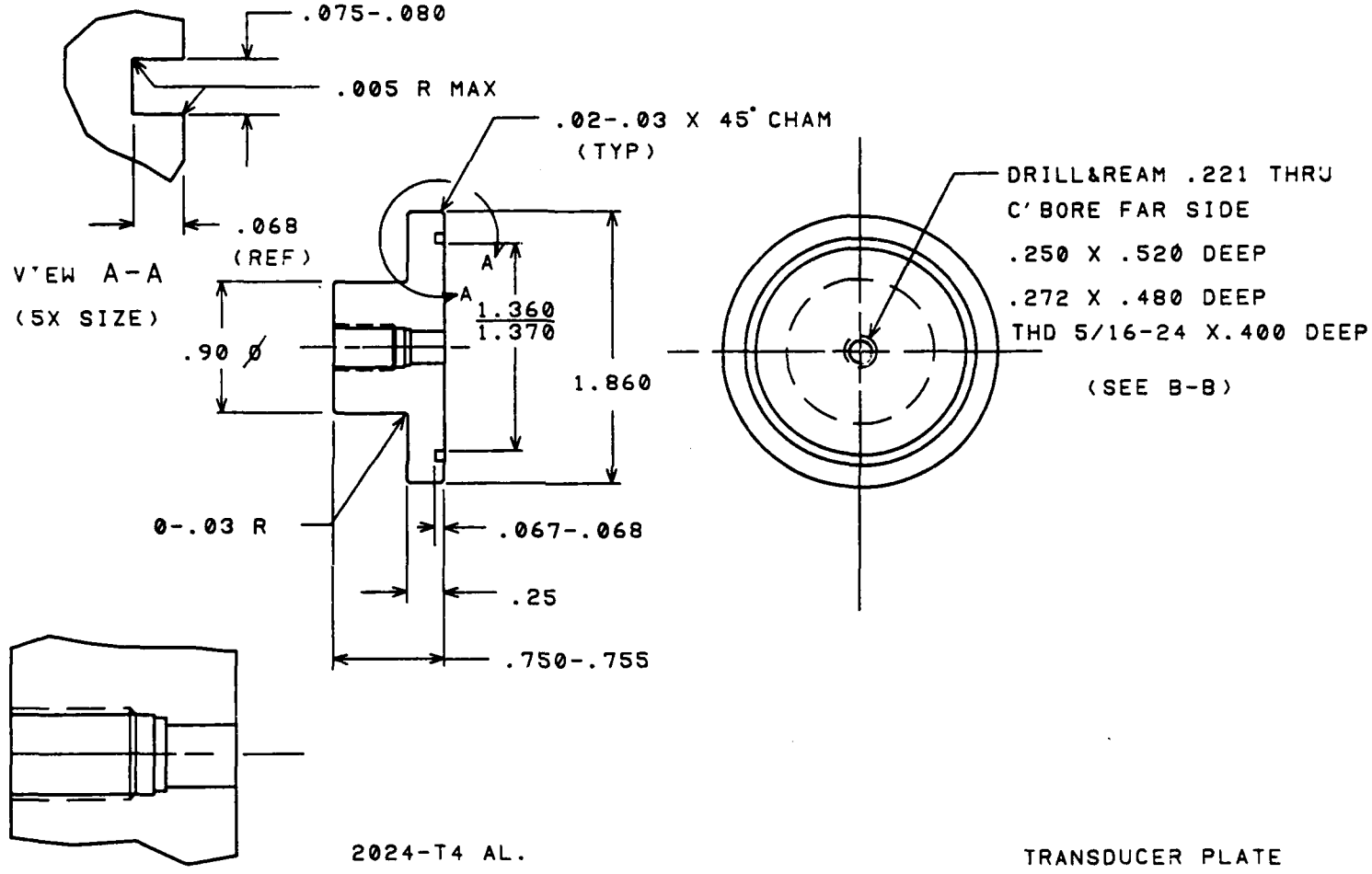

B-B (2X SIZE)

2024-T4 AL.

NONE

515

NONE

TRANSDUCER PLATE
IMPULSE CALIBRATION UNIT

515SK286 A

FULL SIZE 1 1

©U.S.Government Printing Office 1990 748 056/24 129